STANDARD DRAWINGS

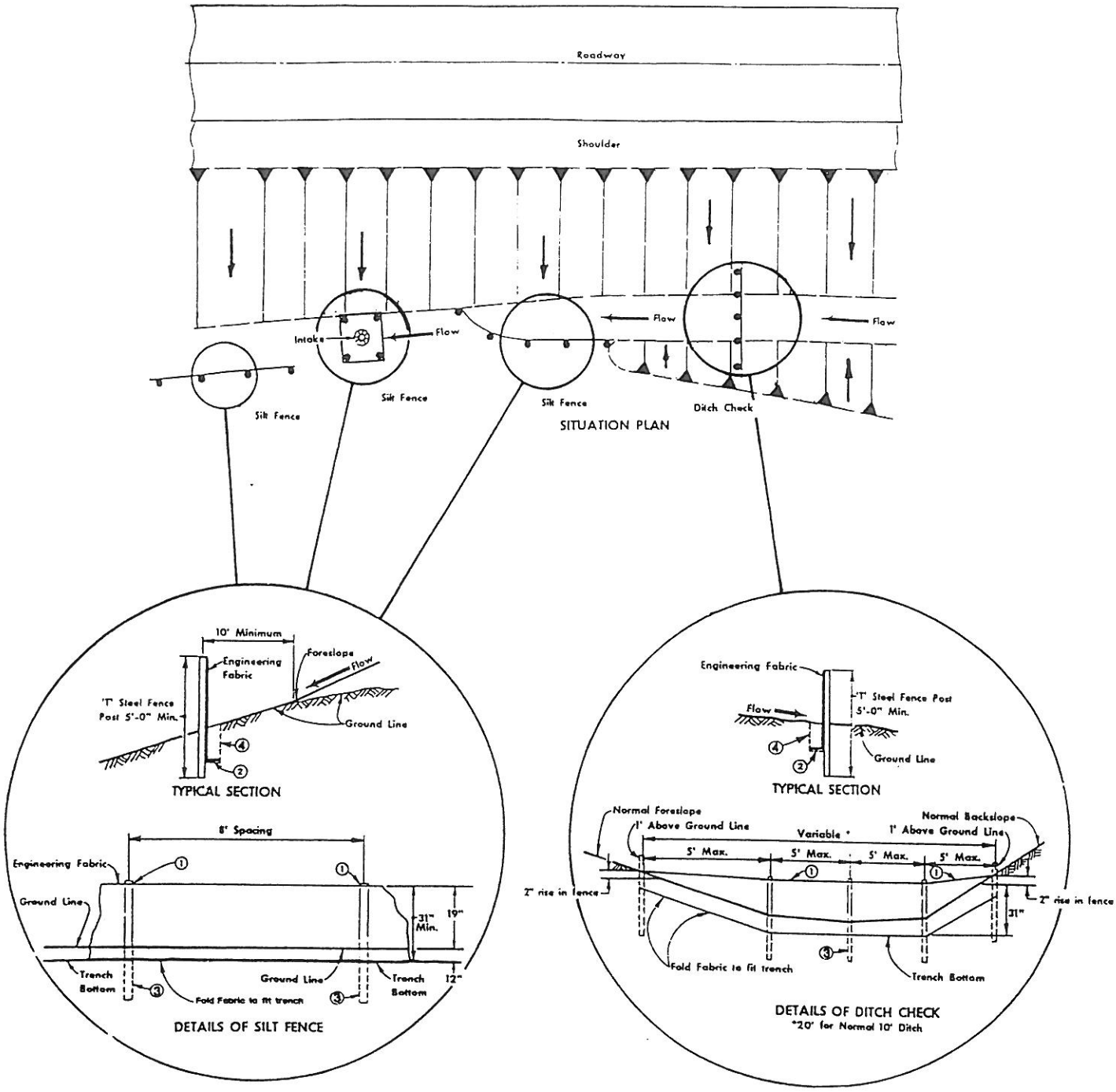

NOTES:

1. SECURE TOP OF ENGINEERING FABRIC TO STEEL POST, SEE DETAIL OF ATTACHMENT TO POST.
2. ENGINEERING FABRIC TO BE FOLDED ACCROSS THE BOTTOM OF THE TRENCH.
3. STEEL POST TO BE EMBEDED 28" BELOW TRENCH BOTTOM.
4. 12" DEEP x 4" WIDE MINIMUM TRENCH, BACKFILL TO BE COMPACTED.

CITY OF WEST DES MOINES "CROSSROADS OF THE INTERSTATES"	**SILT FENCE DETAILS**	REVISED : 3-94 DWG. NO 21

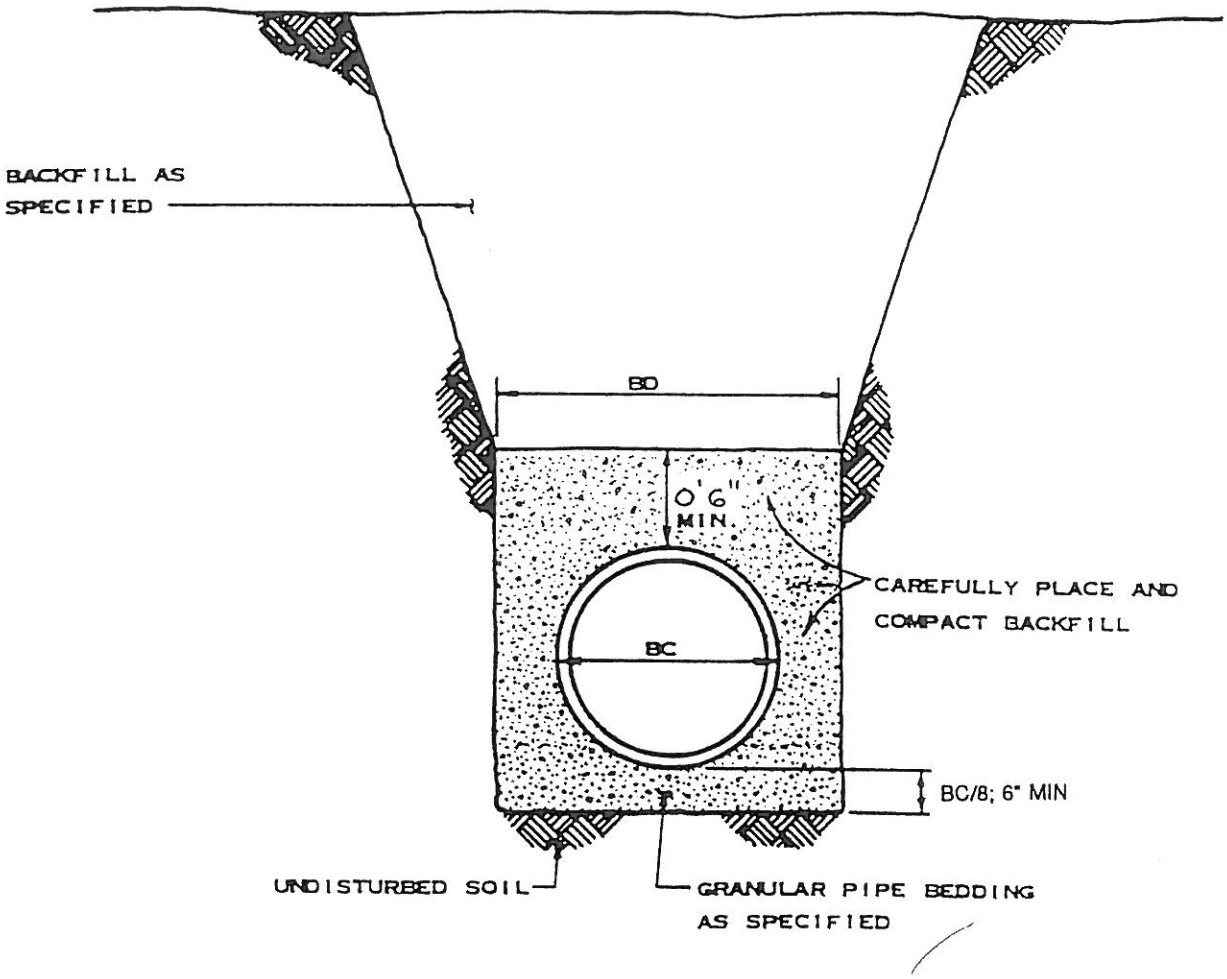

NOTES

1. BC IS OUTSIDE DIAMETER OF PIPE.
2. BD IS TRENCH WIDTH AT TOP OF PIPE.
3. MINIMUM BD = BC + 12"; 2'-3" MIN.
4. FOR TRENCH DEPTHS EXCEEDING 20 FEET, PROVIDE PIPE BEDDING AS DIRECTED BY CITY.

CITY OF WEST DES MOINES "CROSSROADS OF THE INTERSTATES"	FLEXIBLE SEWER PIPE BEDDING	REVISED : 3-94 DWG. NO. 4.1

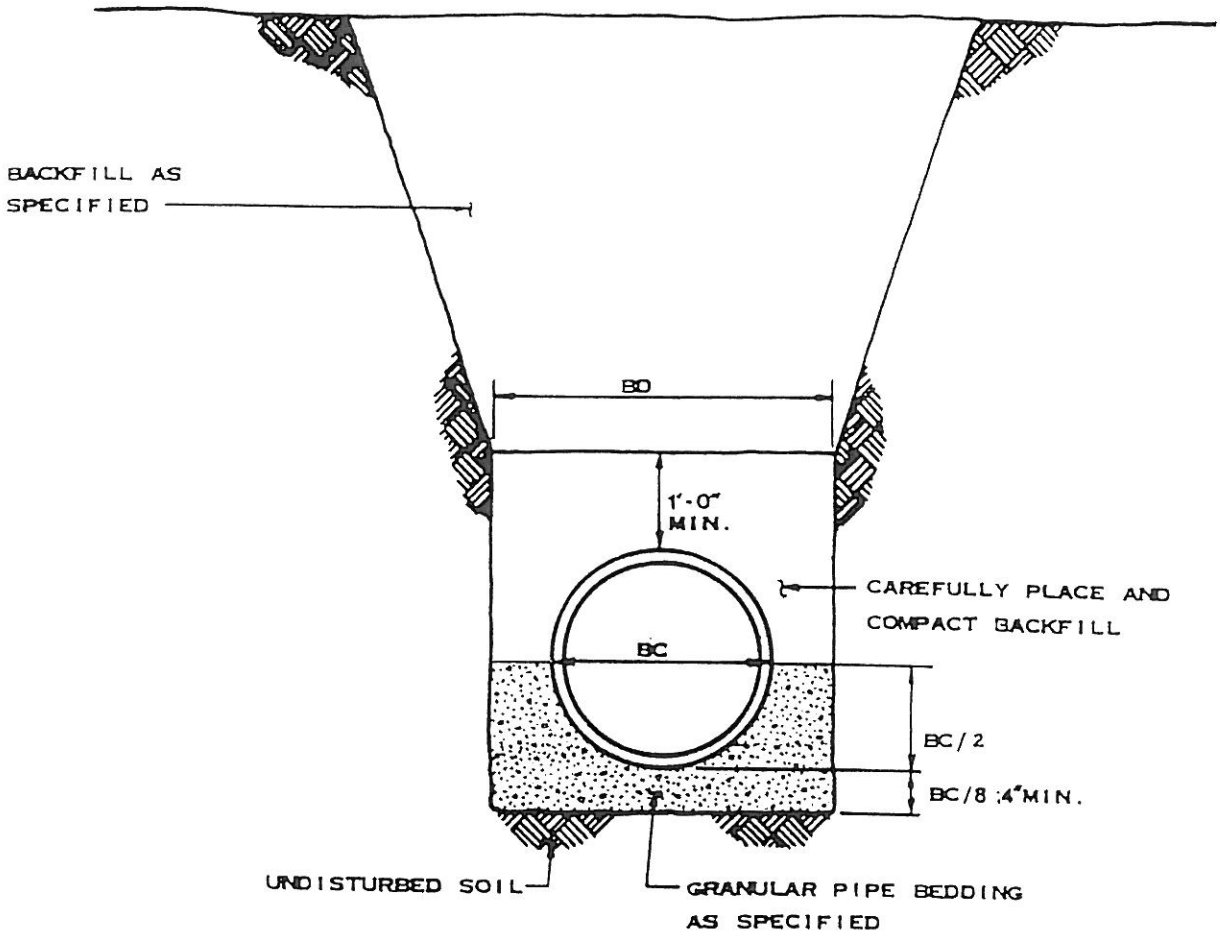

NOTES

1. BC IS OUTSIDE DIAMETER OF PIPE.
2. BD IS TRENCH WIDTH AT TOP OF PIPE.
3. MINIMUM BD = BC + 12"; 2'-3" MIN.
4. FOR TRENCH DEPTHS EXCEEDING 20 FEET, PROVIDE PIPE BEDDING AS DIRECTED BY CITY.

CITY OF WEST DES MOINES "CROSSROADS OF THE INTERSTATES"	RIGID SEWER PIPE BEDDING	REVISED : 3-94 DWG. NO. 4.2

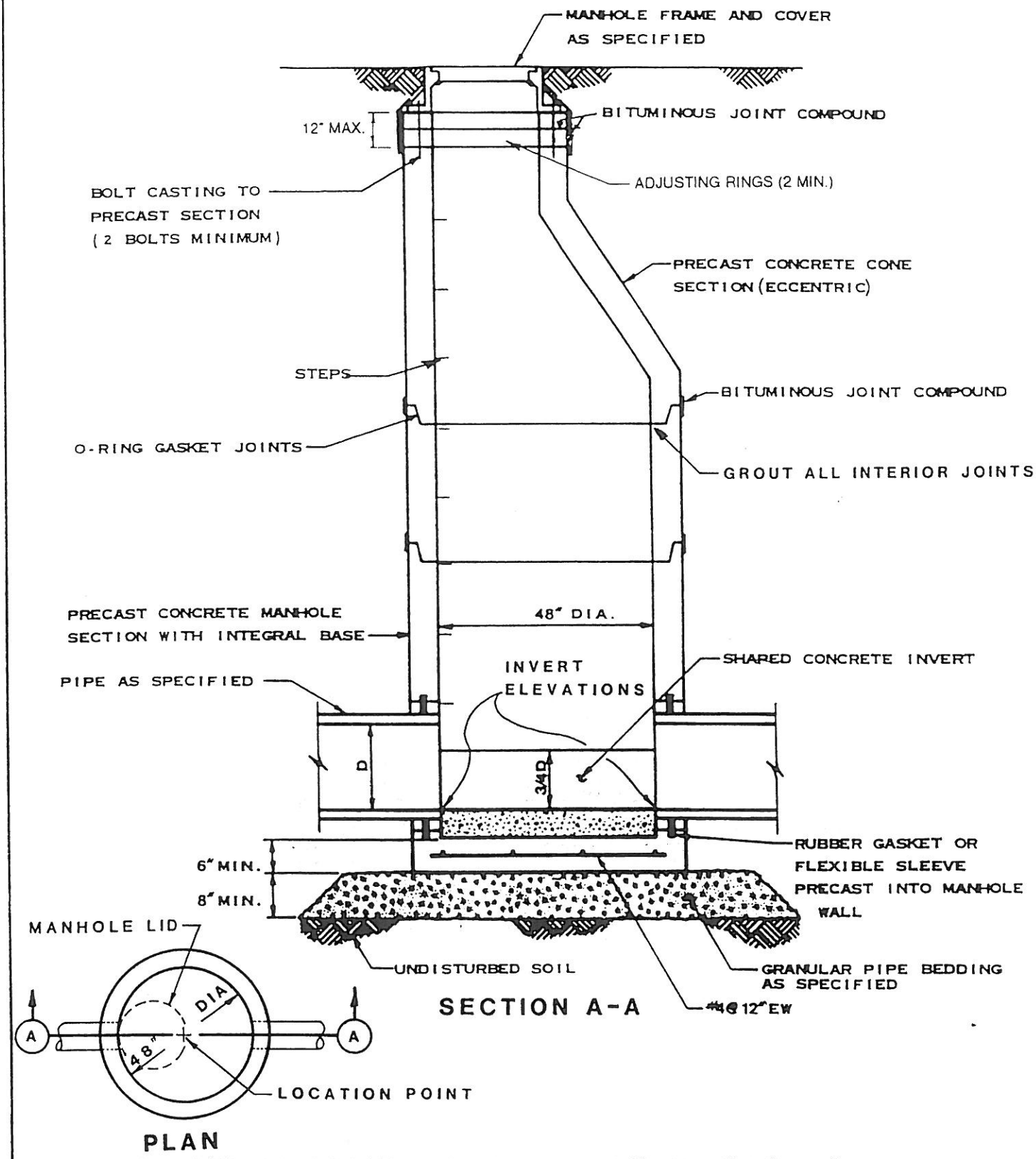

CITY OF WEST DES MOINES

"CROSSROADS OF THE INTERSTATES"

SANITARY SEWER MANHOLE
(PRECAST BASE)

REVISED :
3-94

DWG. NO.

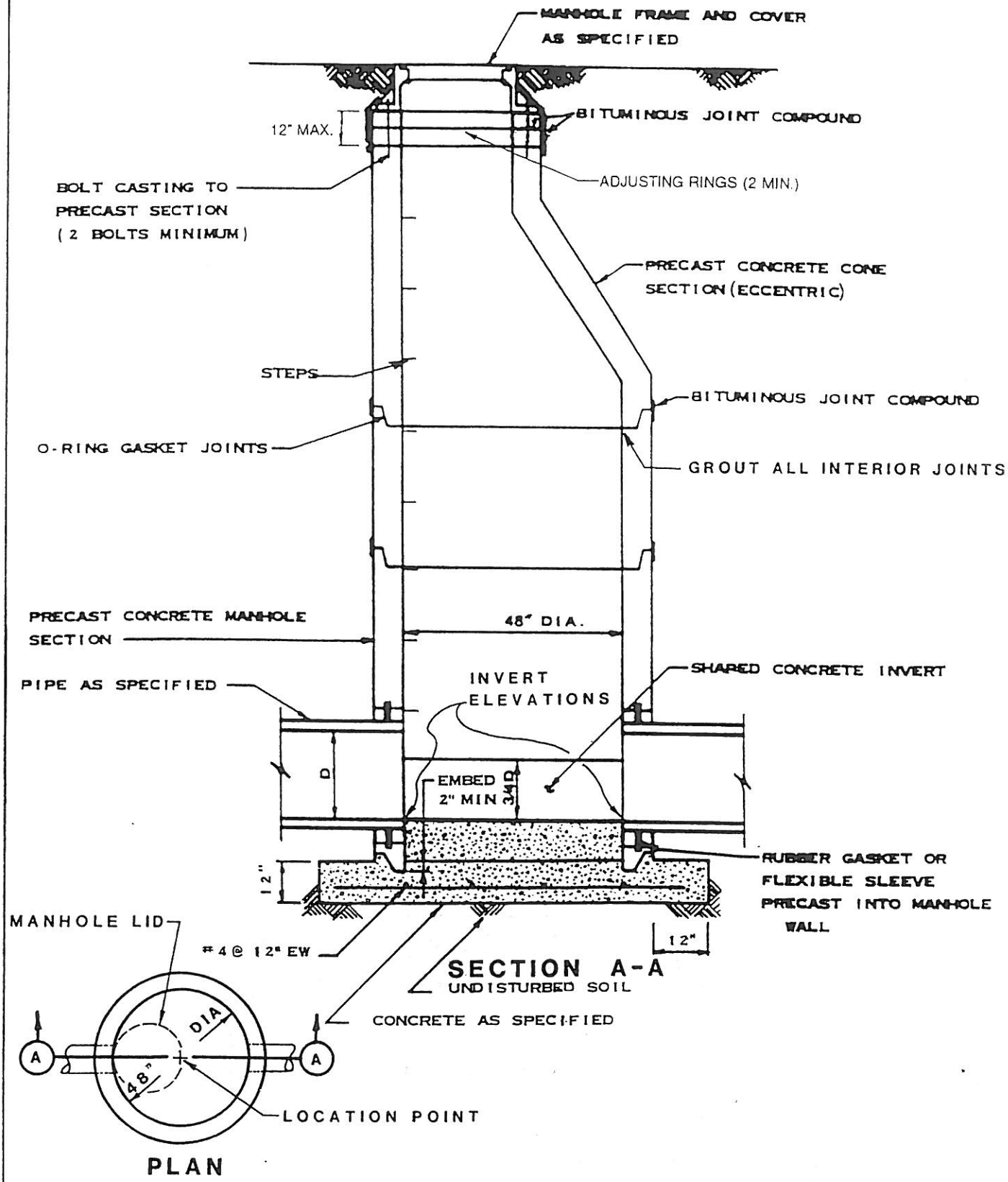

CITY OF WEST DES MOINES

"CROSSROADS OF THE INTERSTATES"

SANITARY SEWER MANHOLE (CAST IN PLACE BASE)

REVISED 3-94

DWG. NO 4.4

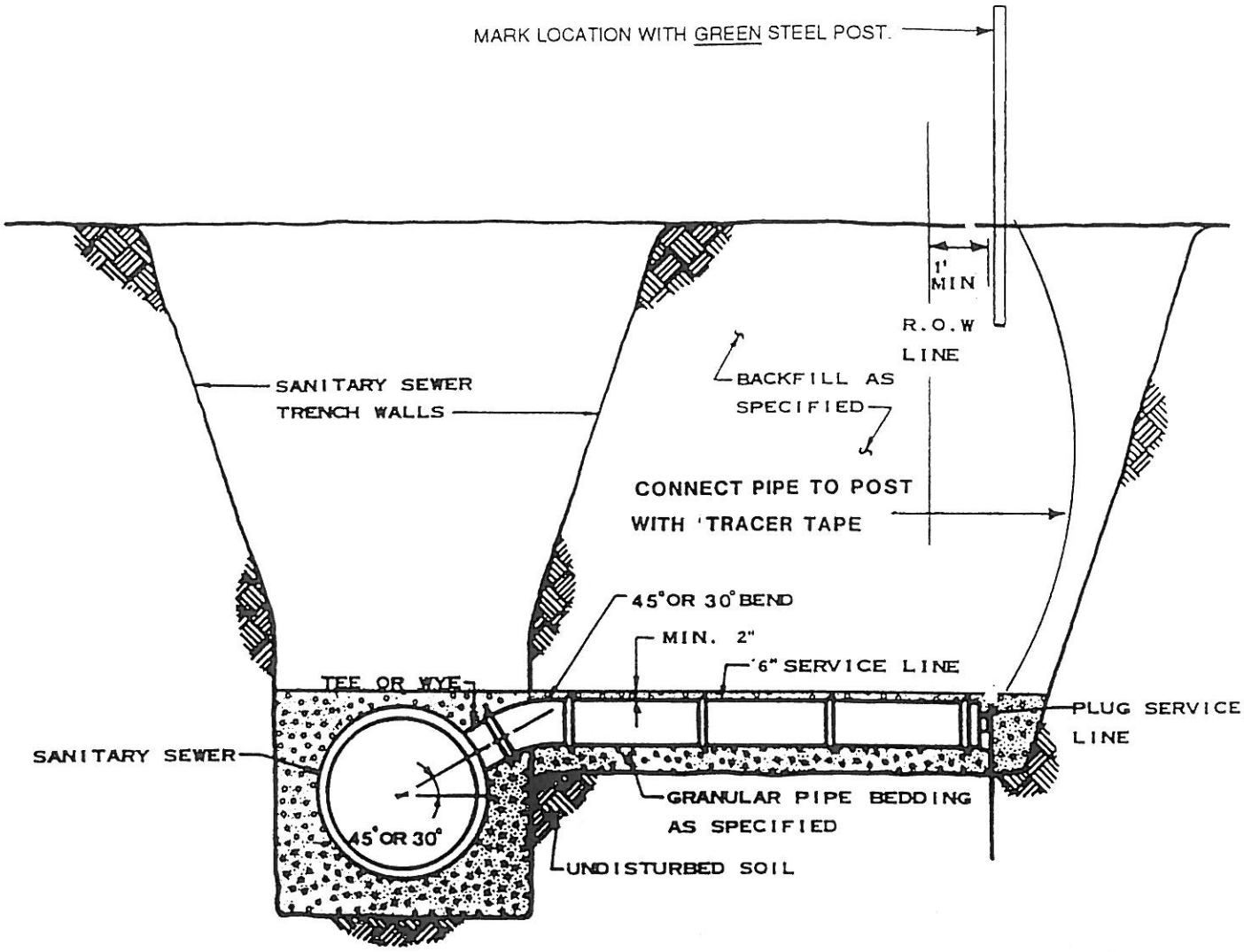

NOTES

1. USE FOR SERVICE CONNECTION WHEN SANITARY SEWER DEPTH IS 12.0' OR LESS OR WHEN REQUIRED TO SERVE ADJACENT PROPERTY.

CITY OF WEST DES MOINES
"CROSSROADS OF THE INTERSTATES"

SANITARY SEWER SERVICE

REVISED 3-94

DWG. NO 4.5

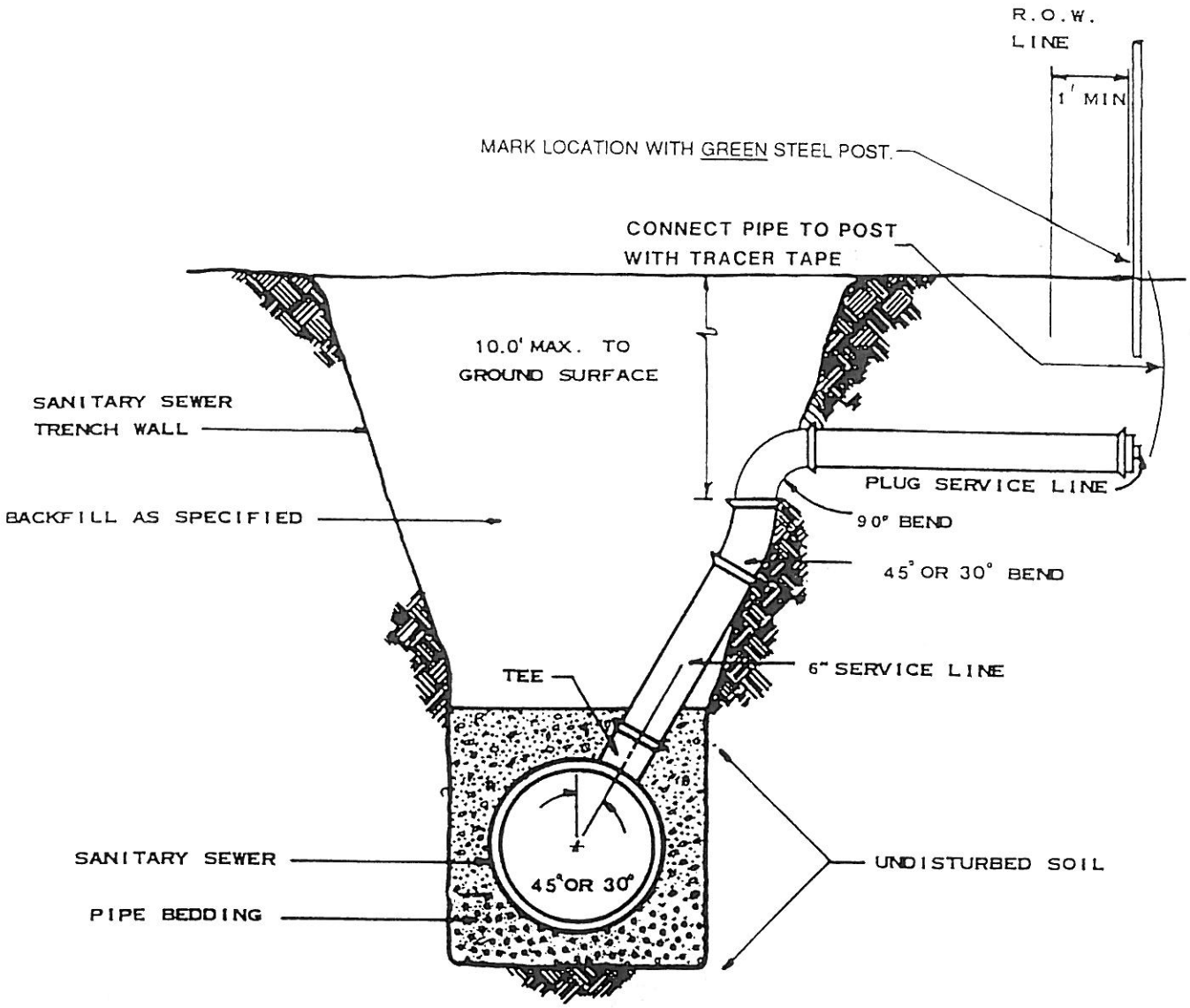

NOTES

1. USE FOR SERVICE CONNECTION WHEN SANITARY SEWER DEPTH EXCEEDS 12.0' UNLESS ADDITIONAL DEPTH IS NECESSARY TO SERVE ADJACENT PROPERTY.

CITY OF WEST DES MOINES
"CROSSROADS OF THE INTERSTATES"

SANITARY SEWER SERVICE RISER

REVISED : 3-94

DWG. NO. 4.6

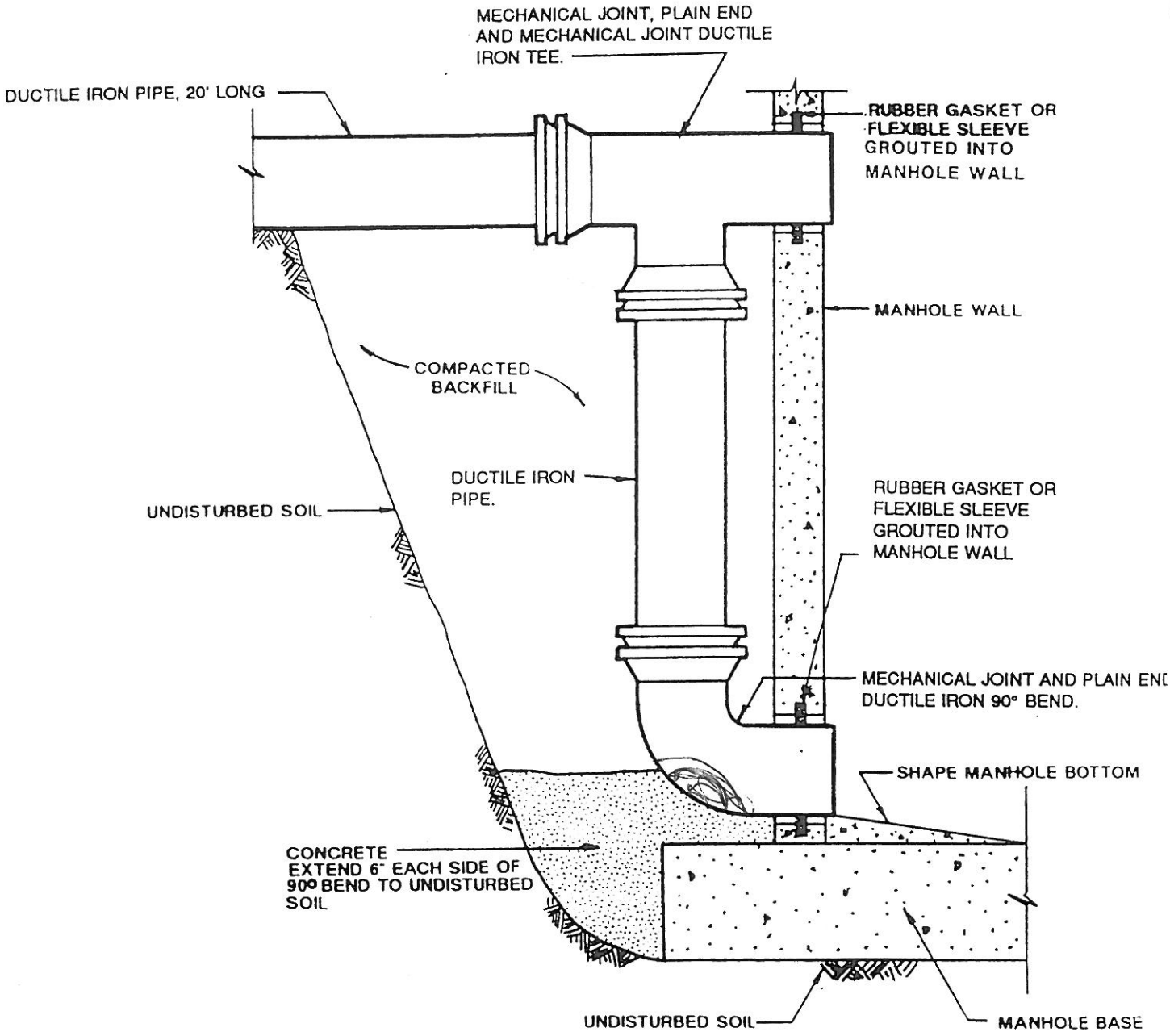

NOTE:

1. USE DROP CONNECTIONS WHERE REQUIRED
2. EXTEND CONCRETE 6" ON EACH SIDE OF 90° BEND TO UNDISTURBED SOIL.
3. DUCTILE IRON PIPE: ANSI A21.50. AWWA C150.CLASS 52.
4. DUCTILE IRON PIPE AND DROP PIPE SAME SIZE AS LINE INTO MANHOLE.
5. MECHANICAL JOINT FITTINGS: ANSI A21.10, 150 PSI PRESSURE RATING. COAT WITH STANDARD COATING INSIDE AND OUT.

CITY OF WEST DES MOINES "CROSSROADS OF THE INTERSTATES"	SANITARY SEWER DROP CONNECTION	REVISED 3 94 DWG. NO 4.7

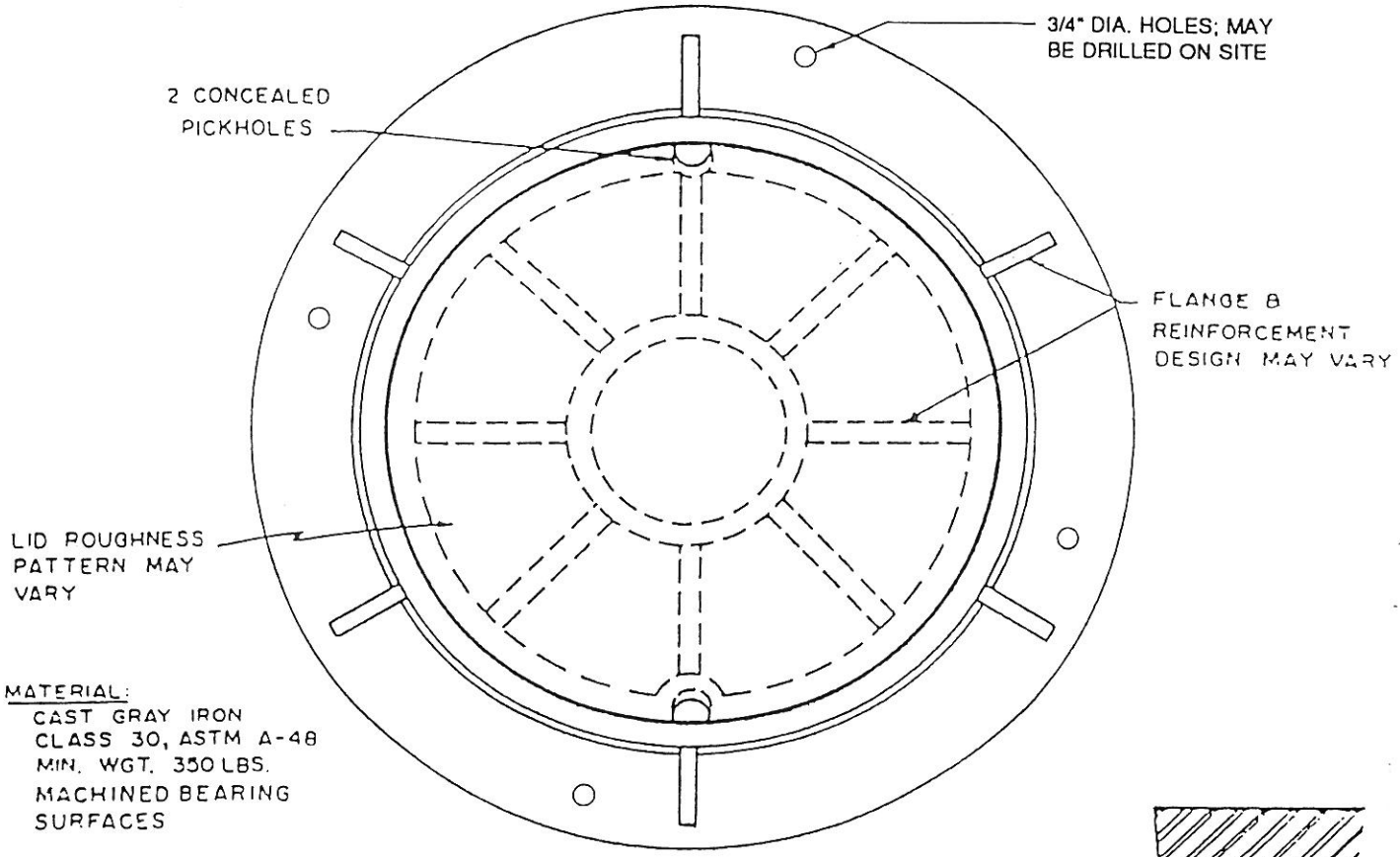

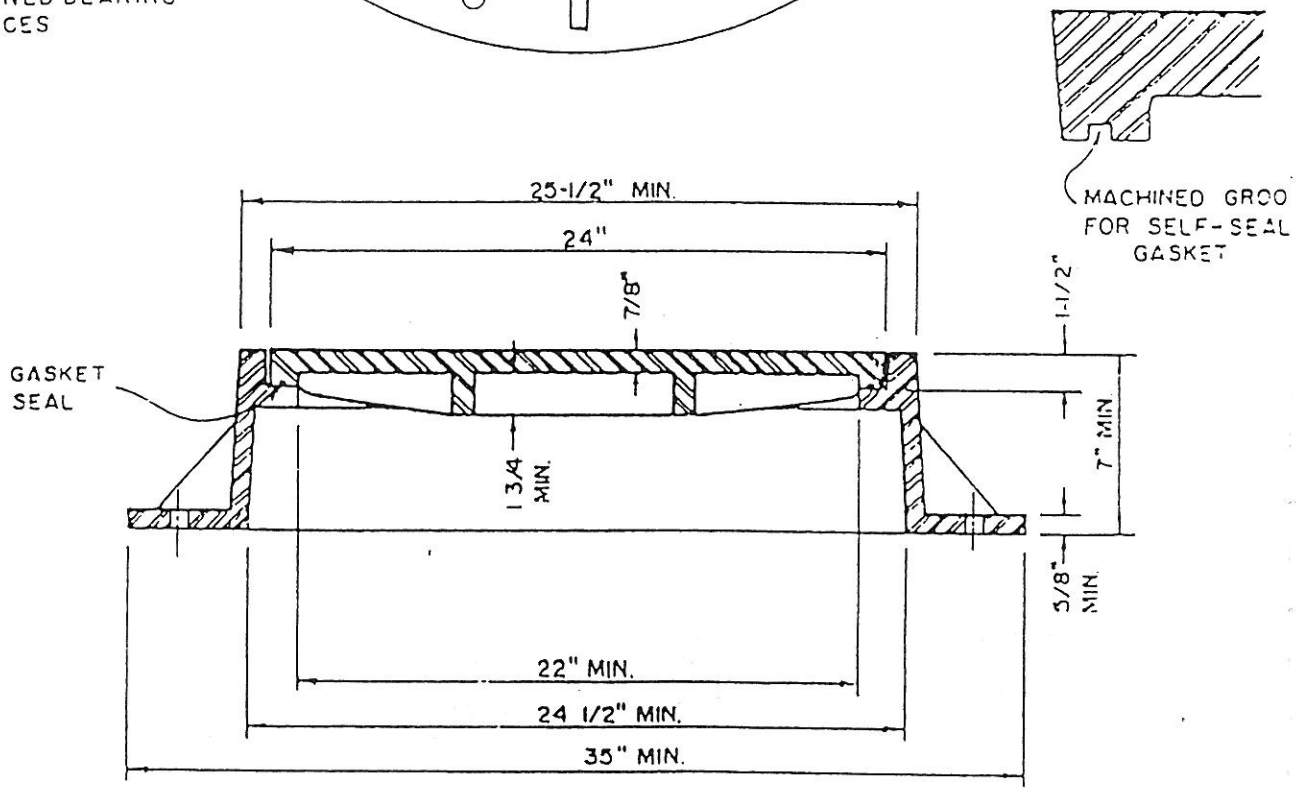

CITY OF WEST DES MOINES "CROSSROADS OF THE INTERSTATES"	**TYPE "A" CASTING SANITARY SEWER**	REVISED 3-94 DWG. NO 4.8

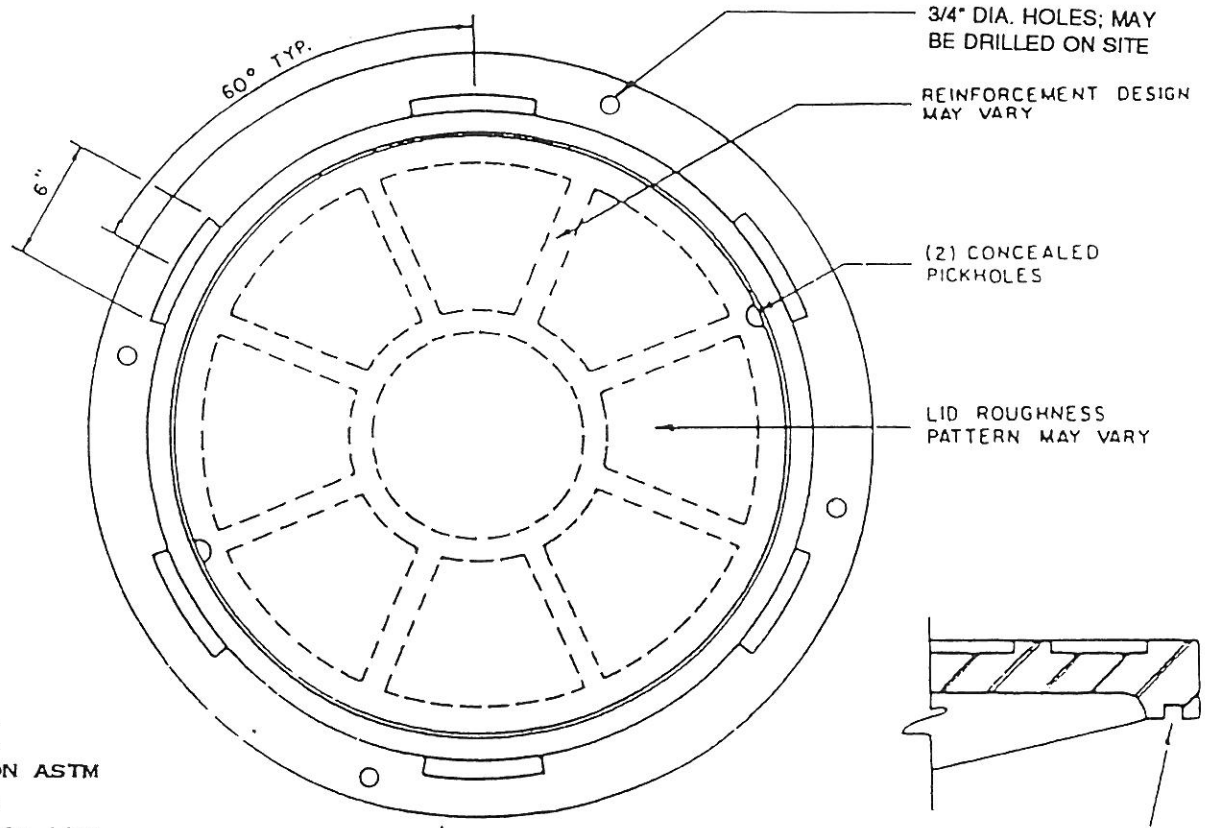

MATERIAL:
CAST GRAY IRON ASTM
A-48 CLASS 30
MIN. WEIGHT 420 LBS.
MACHINE BEARING SURFACES

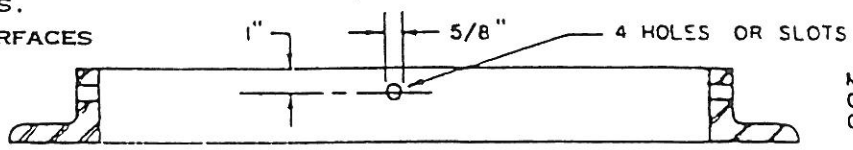

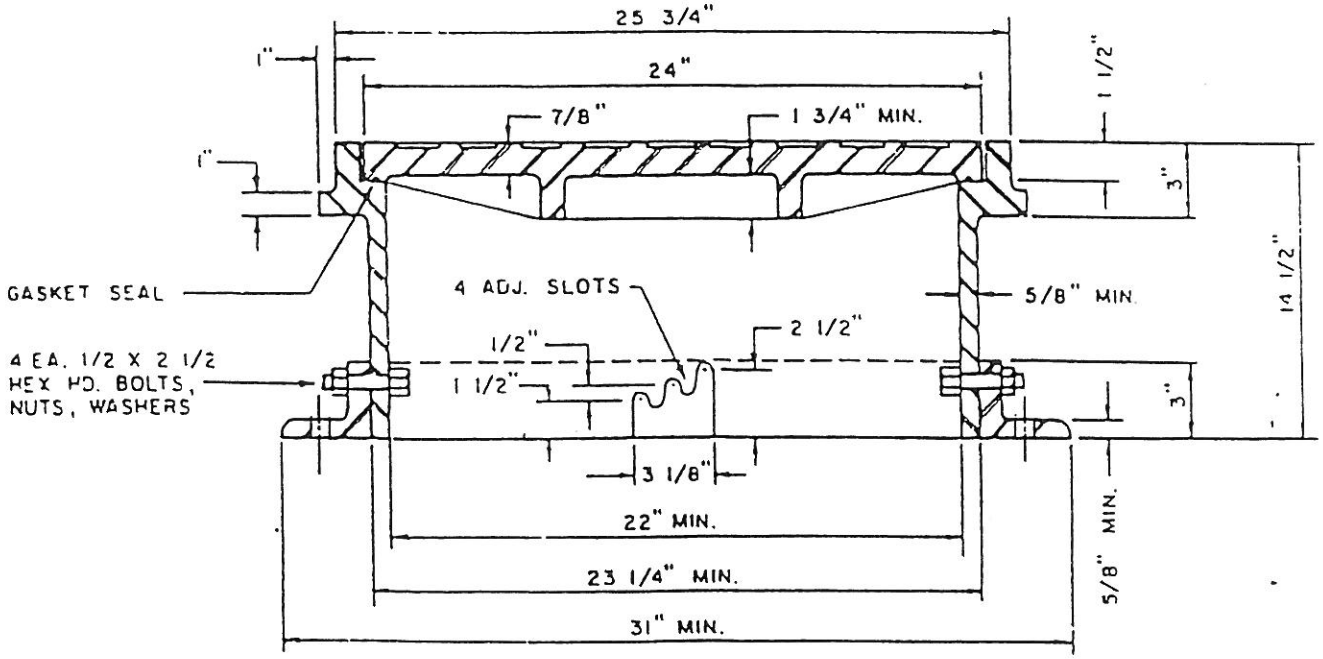

NOTE:
1. USE ONLY TYPE C CHECKERED TOP LID; RAISED DIAMOND PATTERN NOT ACCEPTABLE.

CITY OF WEST DES MOINES
"CROSSROADS OF THE INTERSTATES"

TYPE "B" CASTING SANITARY SEWER

REVISED 3-94

DWG. NO 4.9

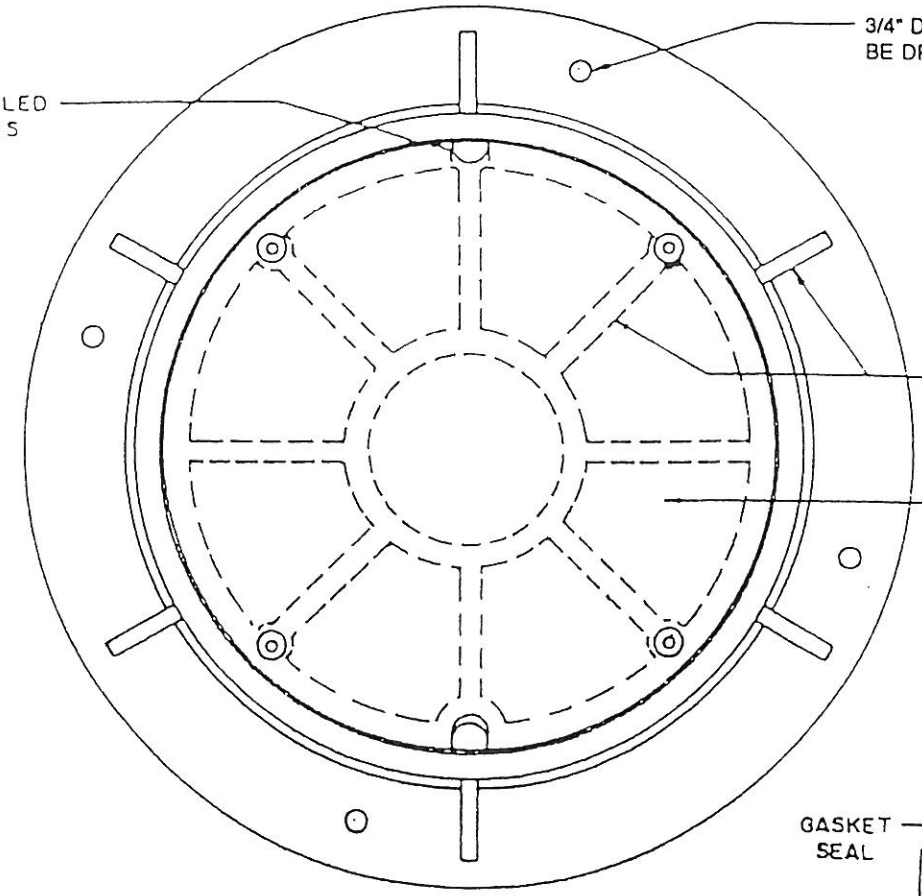

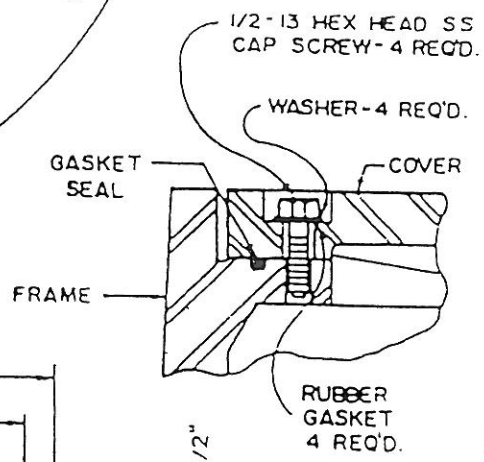

MATERIAL:
CAST GRAY IRON
CLASS 30, ASTM A-48
MIN. WGT. 350 LBS.
MACHINED BEARING SURFACES

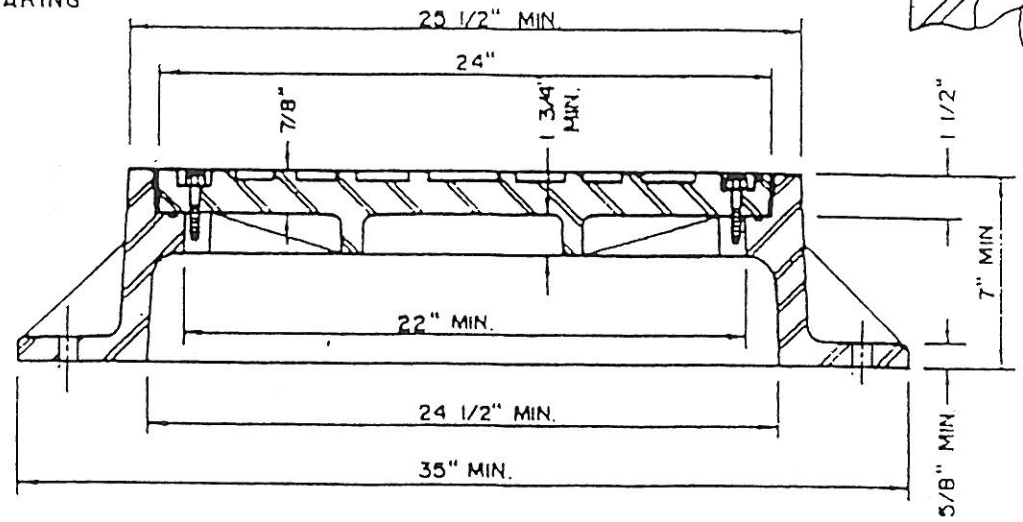

CITY OF WEST DES MOINES
"CROSSROADS OF THE INTERSTATES"

TYPE "C" CASTING
SANITARY SEWER

REVISED 3-94

DWG. NO. 4.10

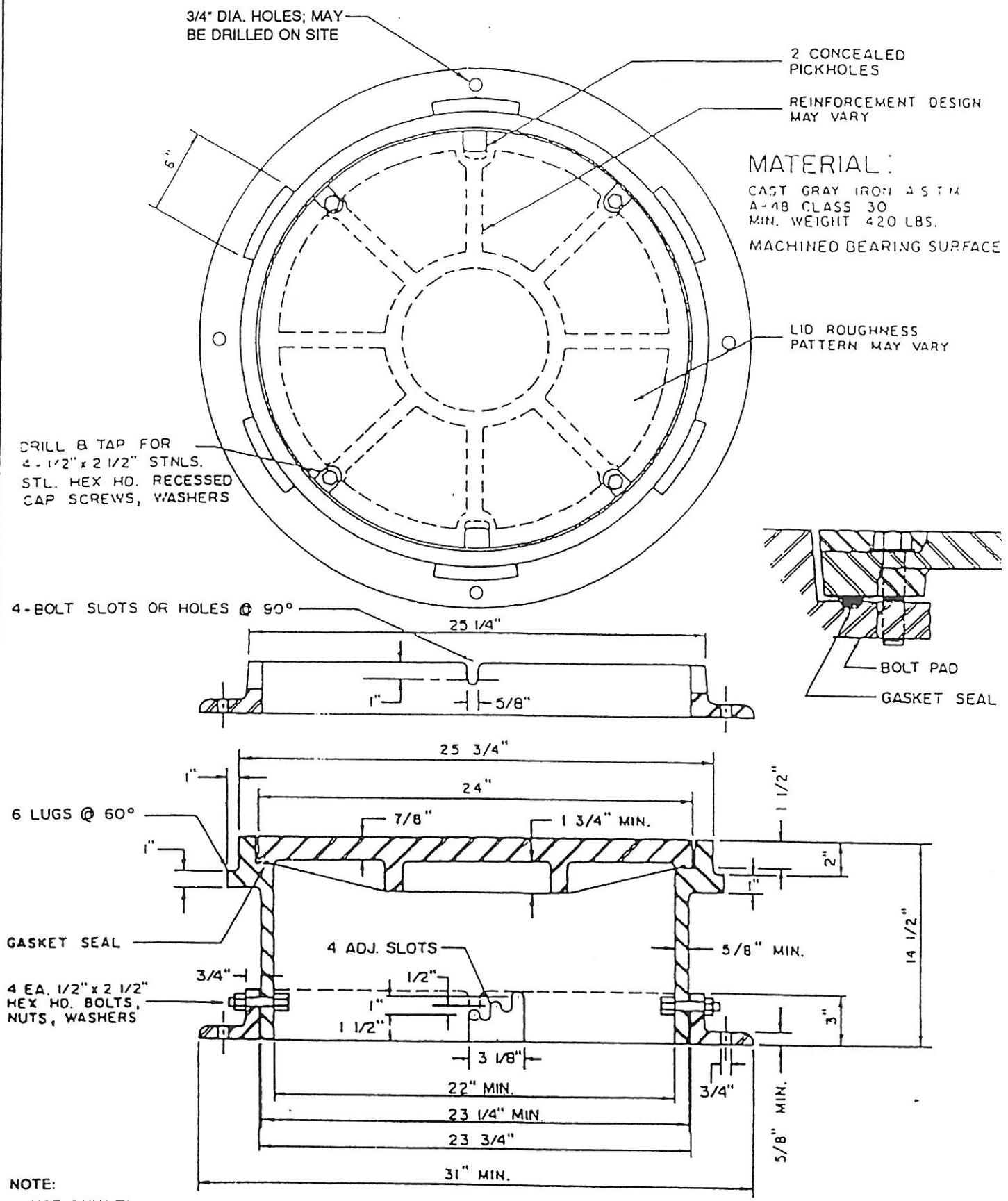

NOTE:

1. USE ONLY TYPE C CHECKERED TOP LID; RAISED DIAMOND PATTERN NOT ACCEPTABLE.

CITY OF WEST DES MOINES "CROSSROADS OF THE INTERSTATES"	**TYPE "D" CASTING SANITARY SEWER**	REVISED 3-94 DWG. NO. 4.11

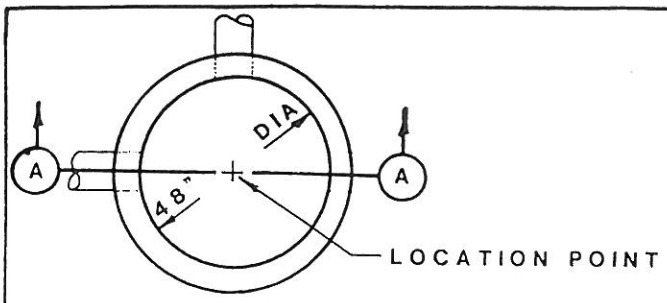

PLAN

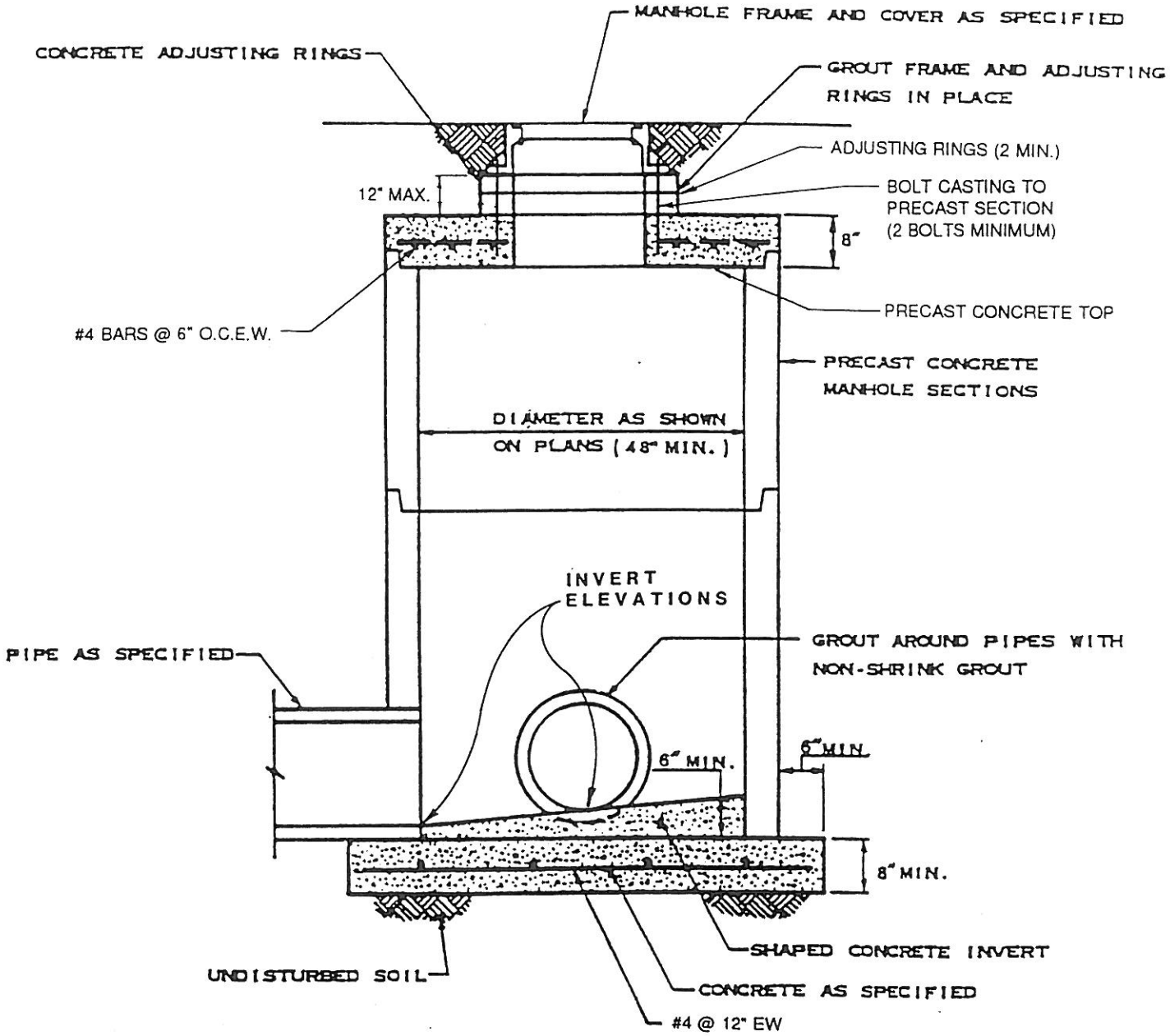

SECTION A-A

NOTES:
1. MINIMUM DEPTH: 4.5'
2. PRECAST CONCRETE TOP SHALL BE SUITABLE
3. BOLT CASTING TO PRECAST TOP (2 BOLTS MINIMUM)

CITY OF WEST DES MOINES
"CROSSROADS OF THE INTERSTATES"

TYPE A STORM SEWER MANHOLE

REVISED : 3-94

DWG. NO. 5.1

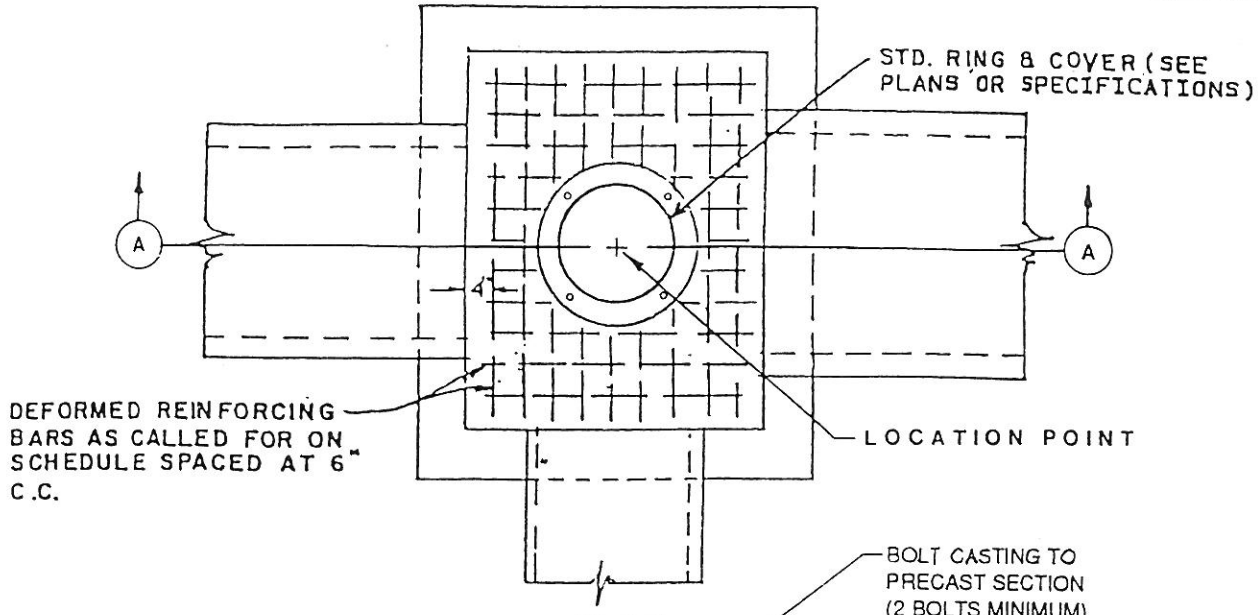

PLAN

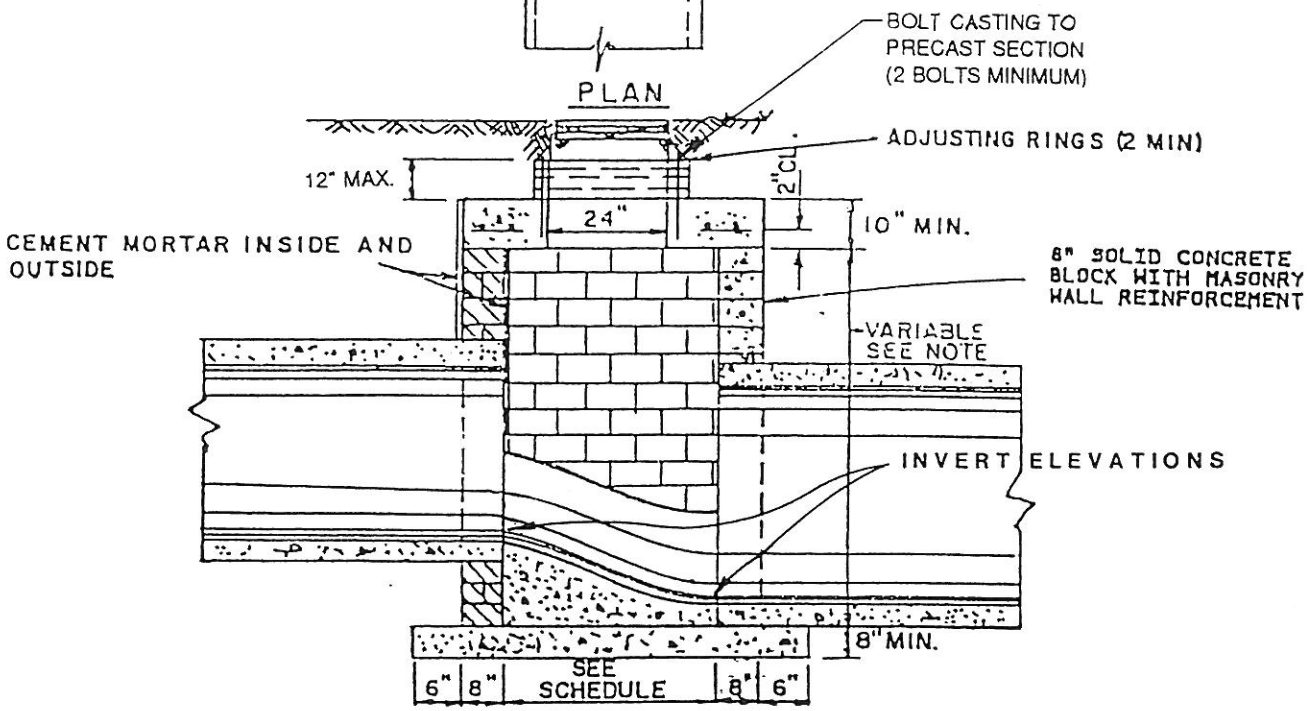

SECTION A-A

MIN. MANHOLE SIZE & STEEL SCHEDULE

PIPE SIZE INSIDE DIA.	MIN. INSIDE DIM. ✳	BAR SIZE UNDER PAVEMENT	BAR SIZE UNDER PARKING
54"	72"	6	5
48"	64"	6	5
42"	56"	5	5
36"	56"	5	4
30"	48"	4	4
24" OR LESS	40"	4	4
NONE	40"	4	4

✳ CORRESPONDING SIDE

NOTES:

1. MAXIMUM DEPTH - 8' FROM CASTING RIM TO INVERT.
2. MINIMUM DEPTH - CHECK FOR PIPE SIZE SPECIFIED.
3. WHEN THE CASTING IS PLACED IN AN AREA OF UNDEVELOPED GROUND, OPEN FIELDS OR PASTURES, IT SHALL BE SET 9" ABOVE THE SURROUNDING GROUND.
4. BOLT CASTING TO PRECAST TOP (2 BOLTS MINIMUM)

CITY OF WEST DES MOINES "CROSSROADS OF THE INTERSTATES"	TYPE B STORM SEWER MANHOLE	REVISE 3-94 DWG. N 5.1A

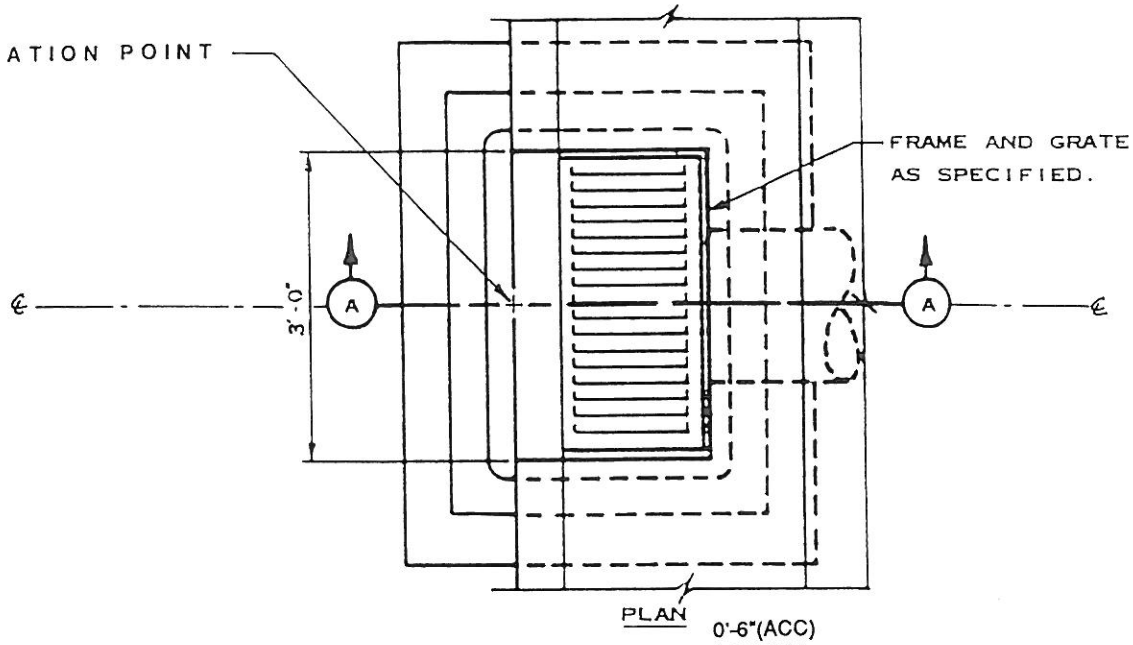

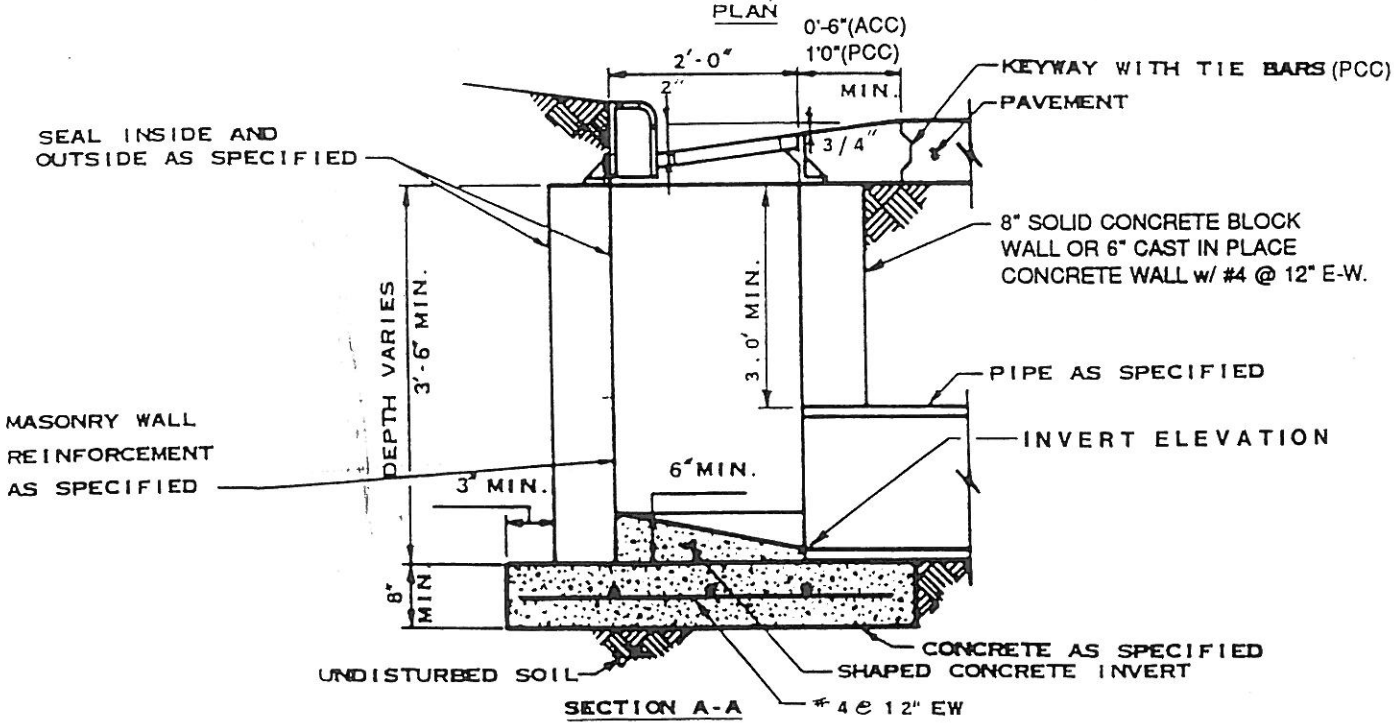

NOTES:
1. MAXIMUM PIPE SIZE: 27" DIAMETER FOR 3' SIDE.
   18" DIAMETER FOR 2' SIDE.
2. MAXIMUM DEPTH: 7' FROM TOP OF CURB TO INVERT.

PCC = PORTLAND CEMENT CONCRETE OPTION
ACC = ASPHALTIC CEMENT CONCRETE OPTION

CITY OF WEST DES MOINES "CROSSROADS OF THE INTERSTATES"	TYPE M-A INTAKE	REVISED 3-94 DWG. NO. 5.2

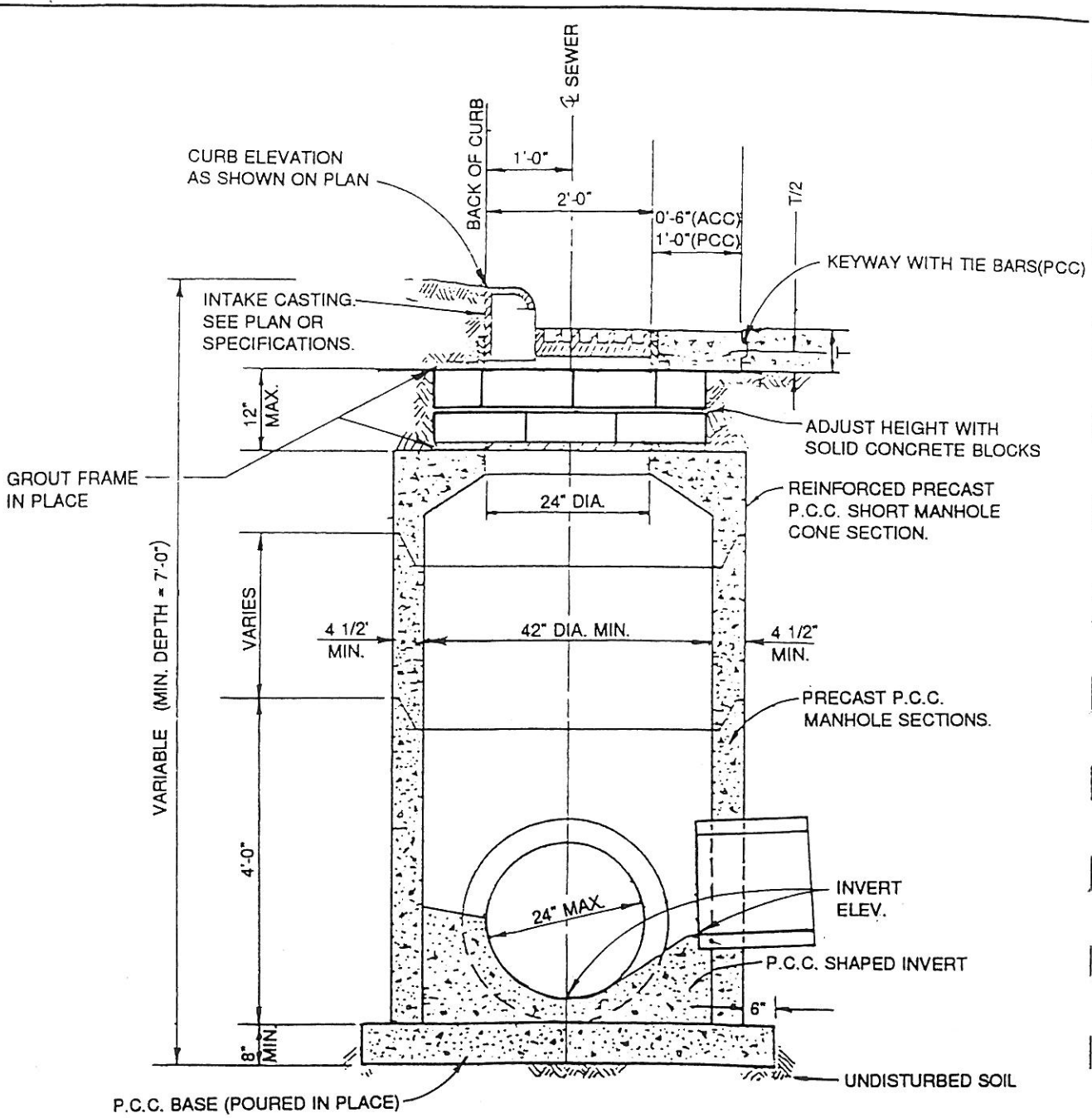

HALF SECTION

NOTES:
1. MAXIMUM PIPE SIZE: 30" DIAMETER PERPENDICULAR TO CURB; 36" PARALLEL TO CURB
2. MAXIMUM DEPTH: 7" FROM TOP OF CURB
3. CONSTRUCT CONCRETE SHAPING AT THE TRANSITION BETWEEN PRECAST MANHOLE AND CONCRETE BLOCKS

PCC = PORTLAND CEMENT CONCRETE OPTION
ACC = ASPHALTIC CEMENT CONCRETE OPTION

CITY OF WEST DES MOINES "CROSSROADS OF THE INTERSTATES"	**TYPE M-B INTAKE**	REVISED : 3-94 DWG. NO 5.2A

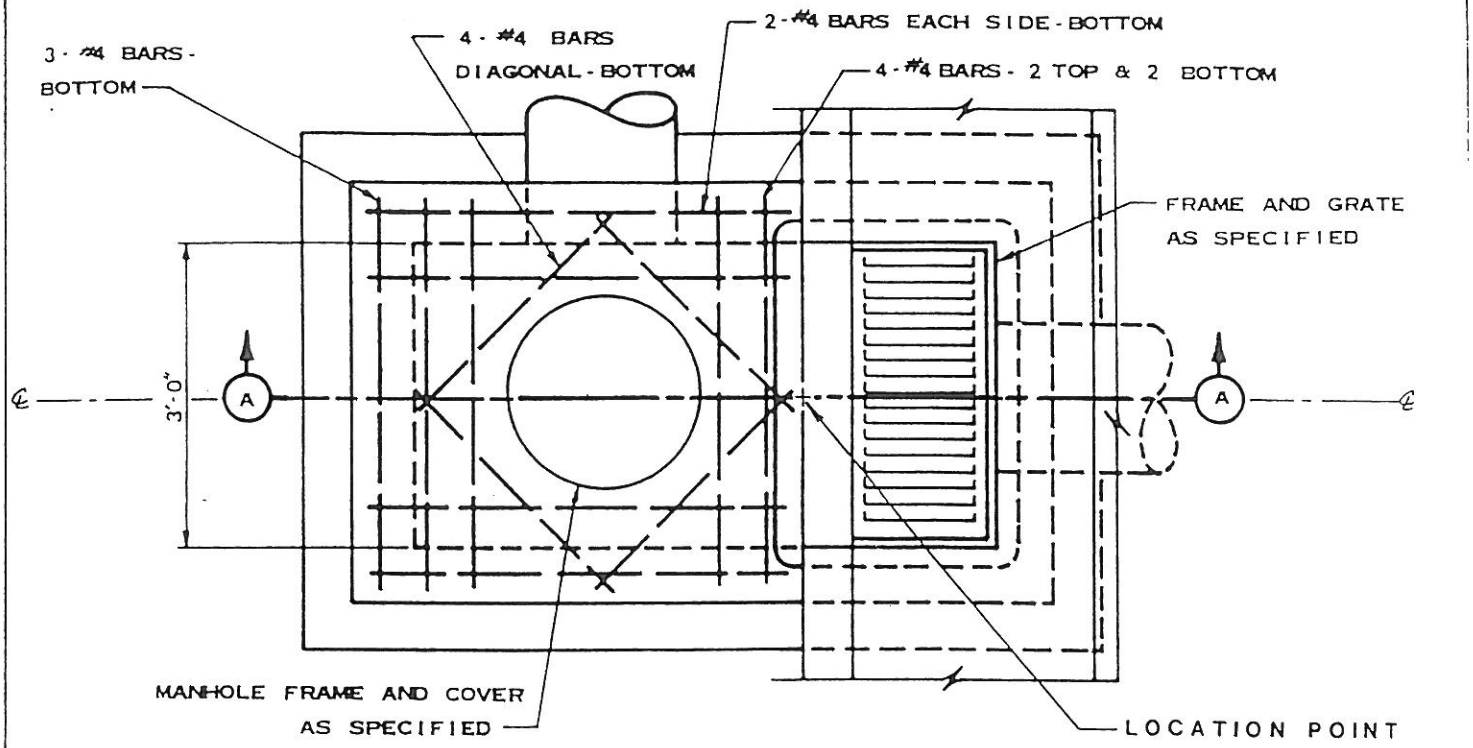

PLAN

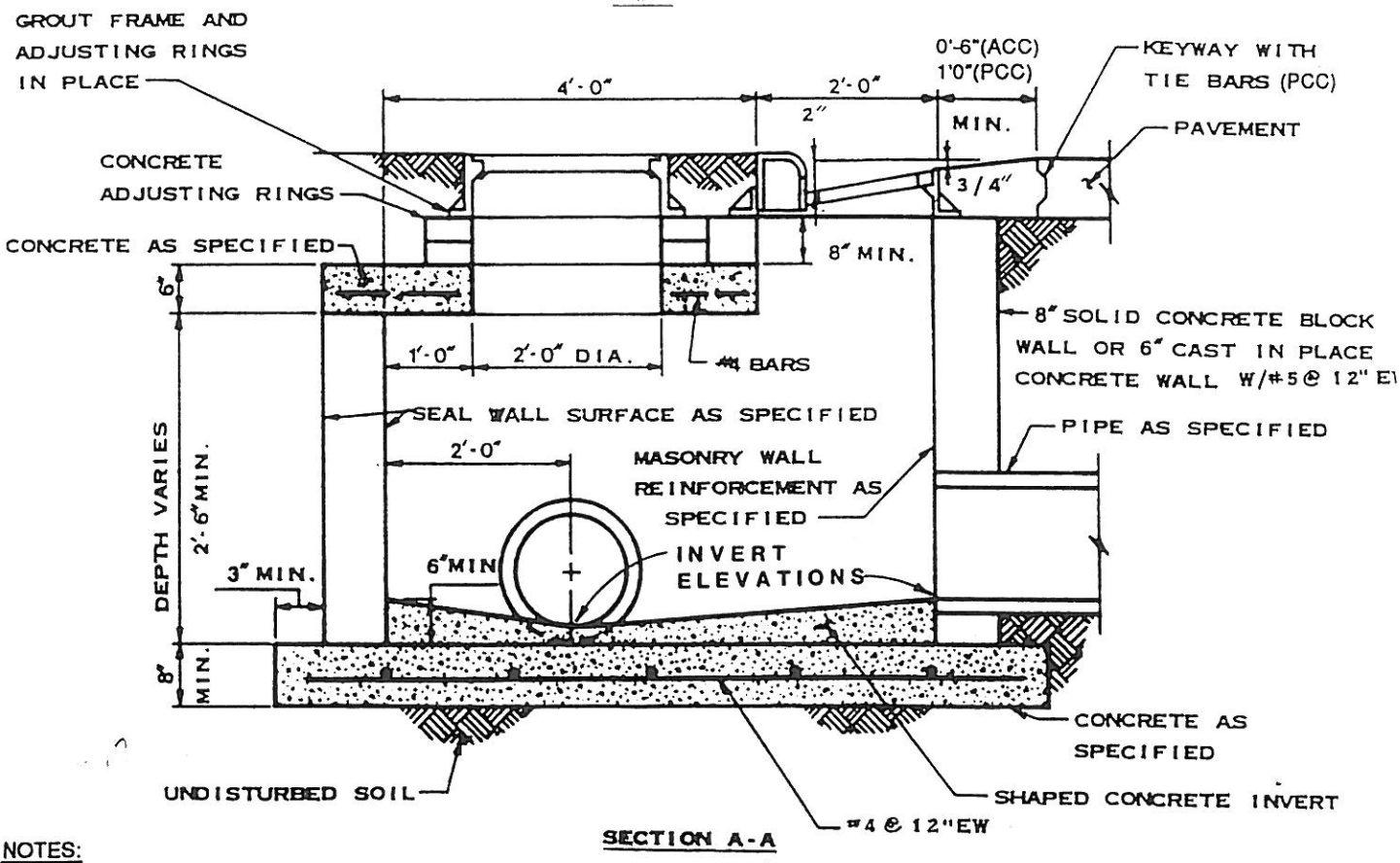

SECTION A-A

NOTES:

1. MAXIMUM PIPE SIZE: 30" DIAMETER PERPENDICULAR TO CURB; 36" PARALLEL TO CURB.
2. MAXIMUM DEPTH: 7' FROM TOP OF CURB TO INVERT.

PCC = PORTLAND CEMENT CONCRETE OPTION
ACC = ASPHALTIC CEMENT CONCRETE OPTION

CITY OF WEST DES MOINES "CROSSROADS OF THE INTERSTATES"	TYPE M-C INTAKE	REVISED : 3-94 DWG. NO. 53

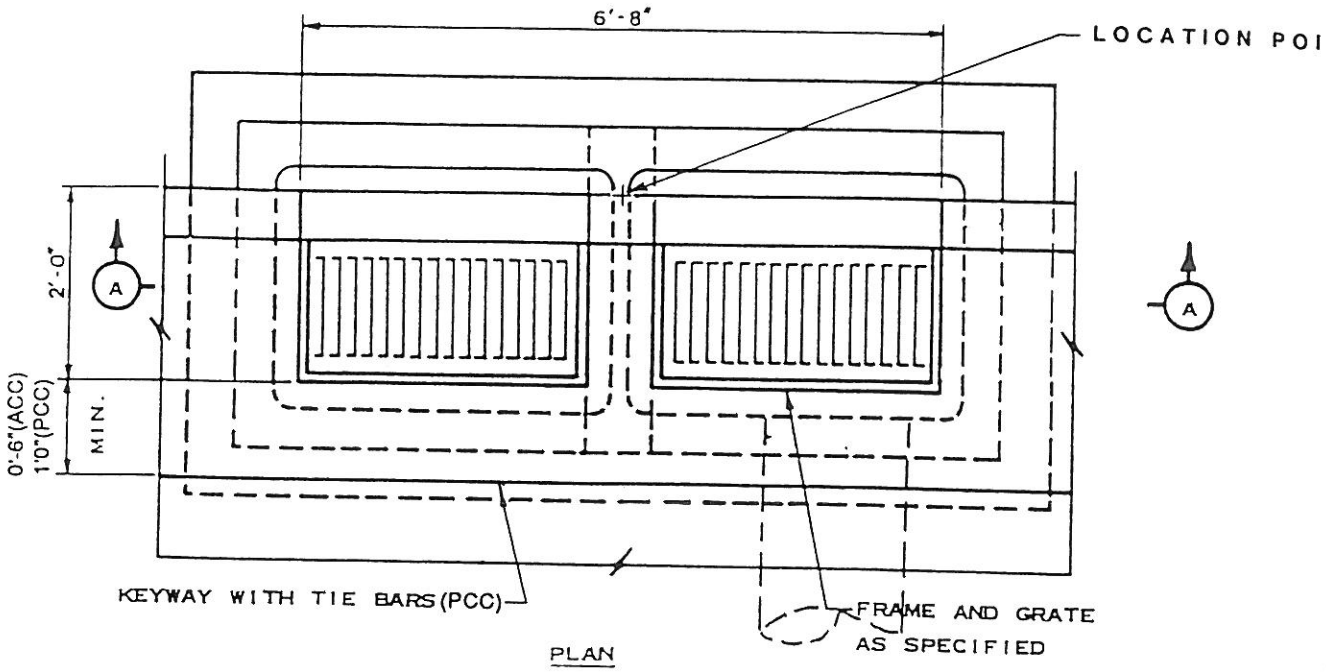

PLAN

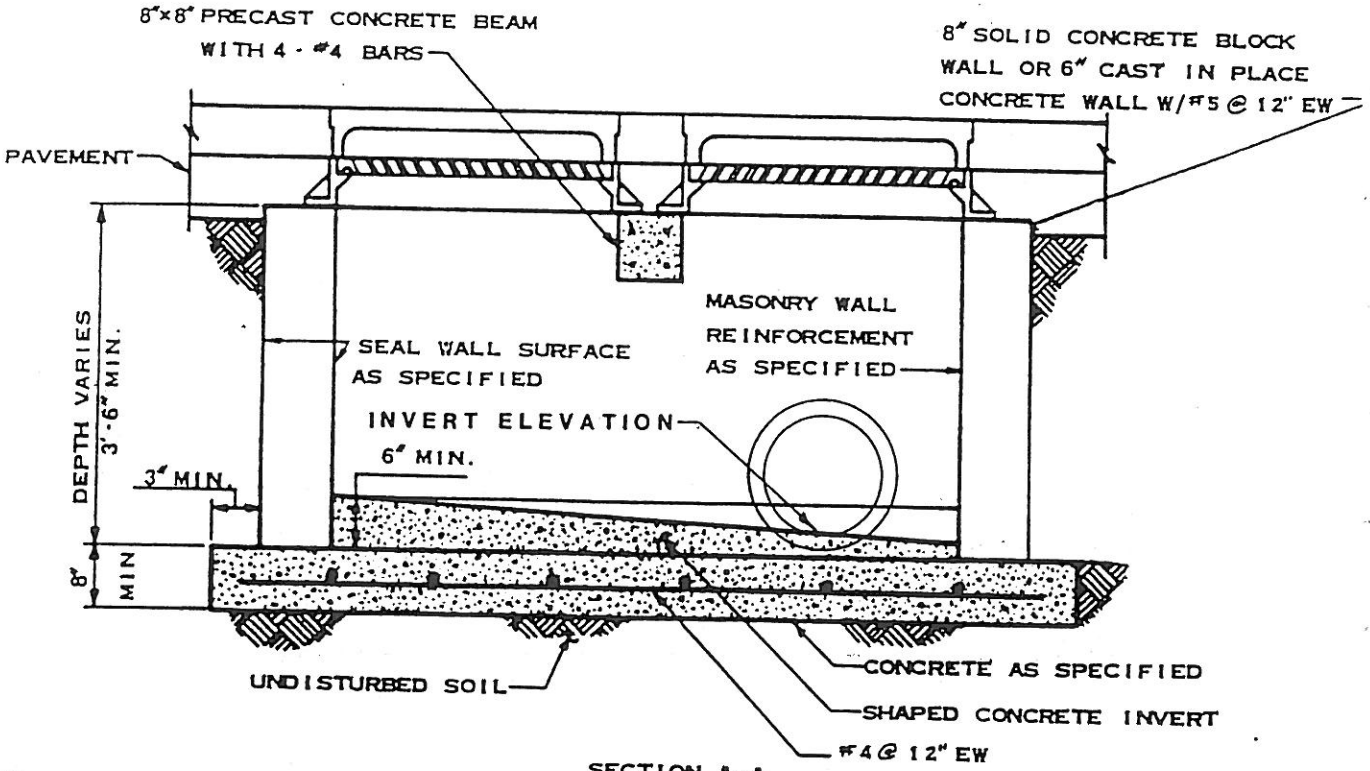

SECTION A-A

NOTES:

1. MAXIMUM PIPE SIZE: 30" DIAMETER PERPENDICULAR TO CURB.
2. MAXIMUM DEPTH: 7' FROM TOP OF CURB TO INVERT.

PCC = PORTLAND CEMENT CONCRETE OPTION
ACC = ASPHALTIC CEMENT CONCRETE OPTION

CITY OF WEST DES MOINES "CROSSROADS OF THE INTERSTATES"	TYPE M-D INTAKE	REVISED 3-94 DWG. NO. 5.4

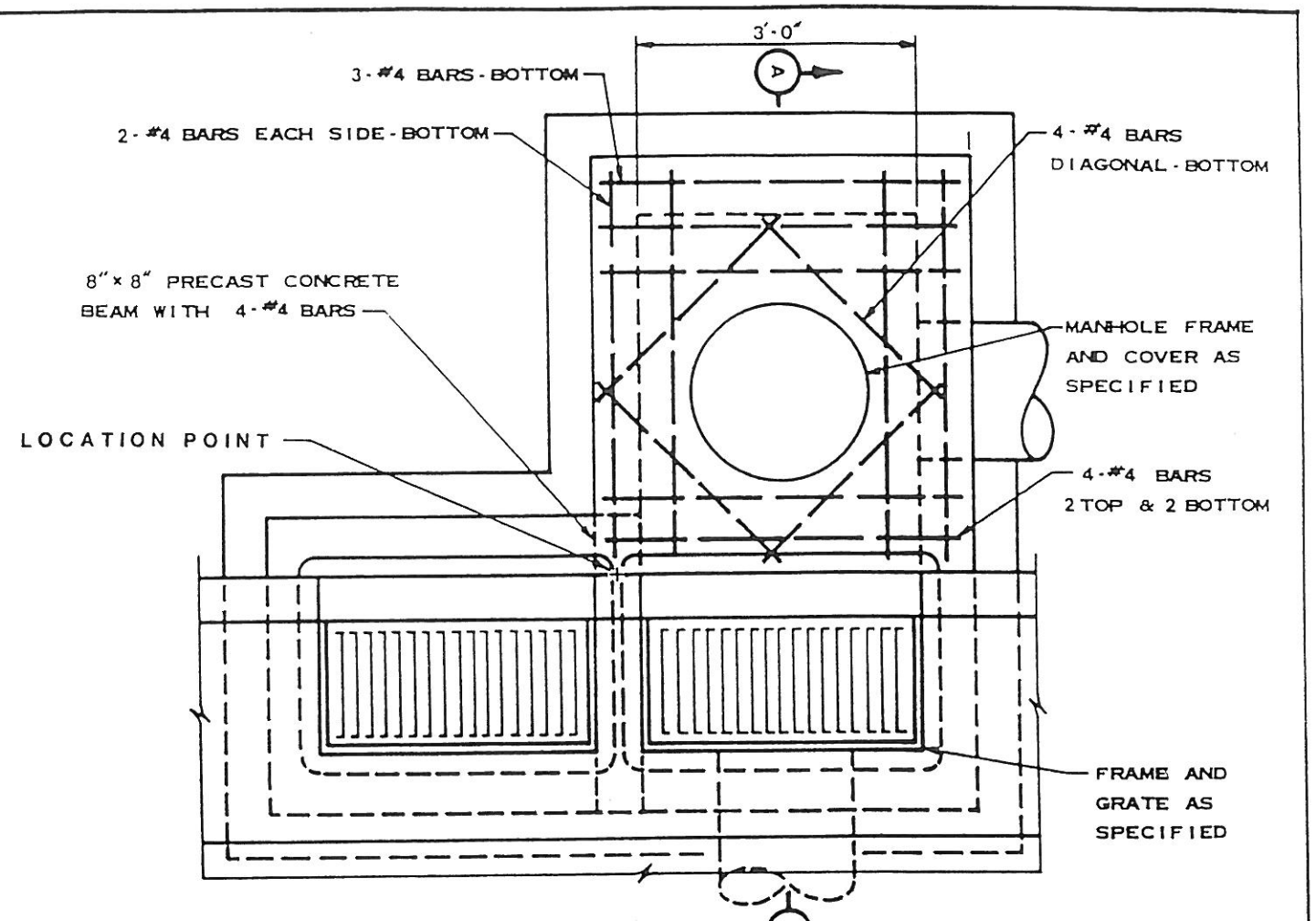

PLAN

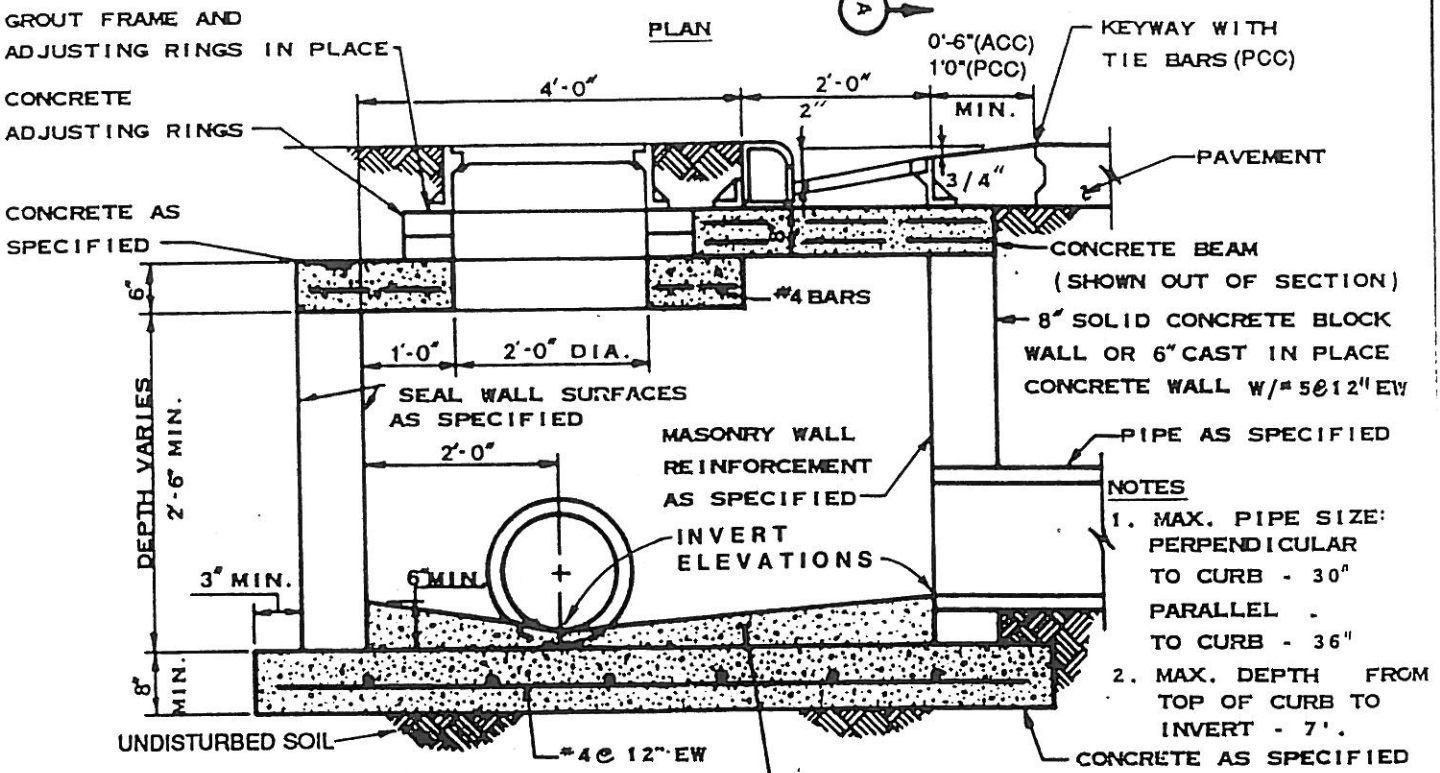

SECTION A-A

NOTES

1. MAX. PIPE SIZE:
   PERPENDICULAR
   TO CURB - 30"
   PARALLEL .
   TO CURB - 36"
2. MAX. DEPTH FROM
   TOP OF CURB TO
   INVERT - 7'.

PCC = PORTLAND CEMENT CONCRETE OPTION
ACC = ASPHALTIC CEMENT CONCRETE OPTION

CITY OF WEST DES MOINES
"CROSSROADS OF THE INTERSTATES"

TYPE M-E INTAKE

REVISED : 3-94

DWG. NO. 5.5

SIZE STRUCTURE SCHEDULE	
PIPE DIAMETER	W-FEET
27" OR LESS	4'
30-42"	5'
48-60"	6'

NOTE:
1. INCREASE STRUCTURE SIZE FOR PIPES NOT ENTERING AT RIGHT ANGLES AS DIRECTED BY CITY ENGINEER.

① MATERIALS AND CONSTRUCTION SHALL BE AS A TYPE M-A INTAKE

MAX. DEPTH-7' TOP CASTING TO INV.

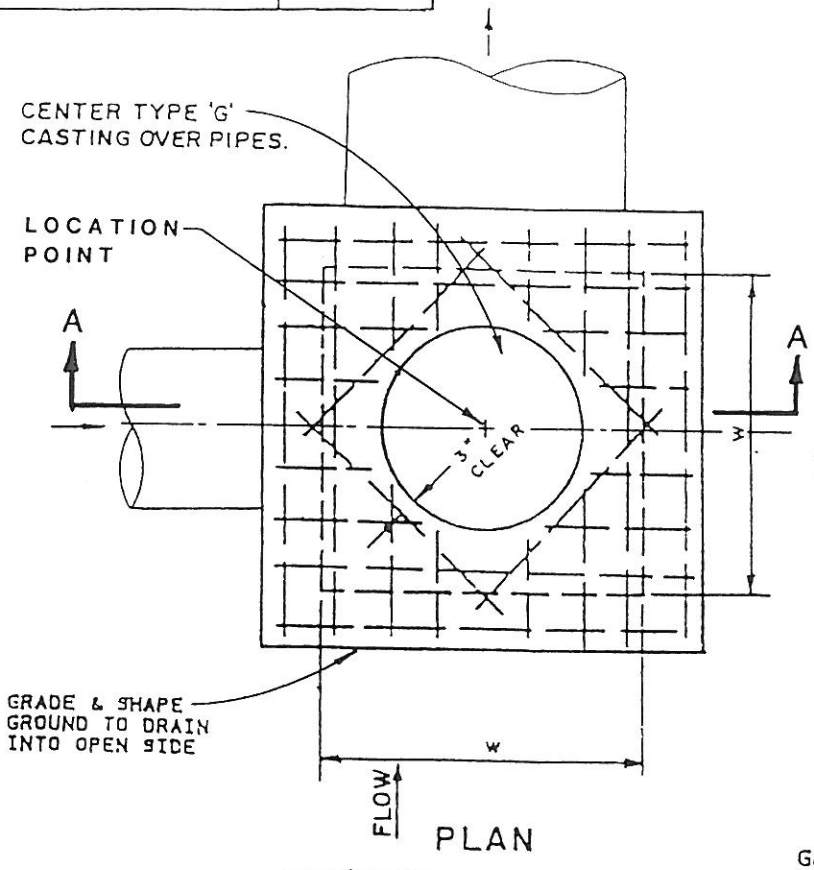

PLAN

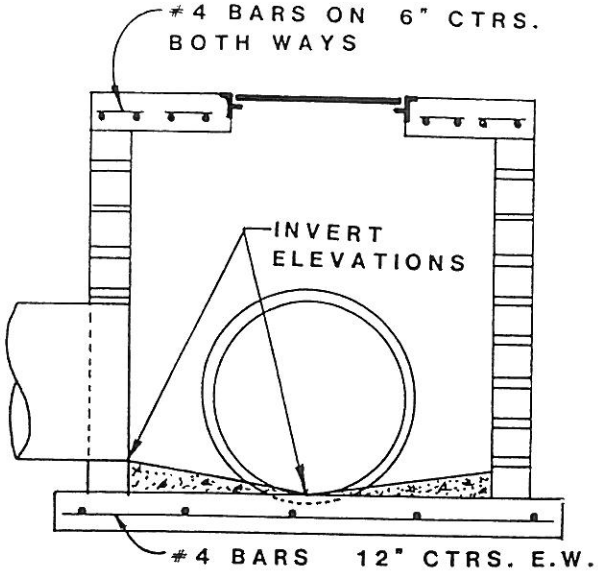

SECTION A-A

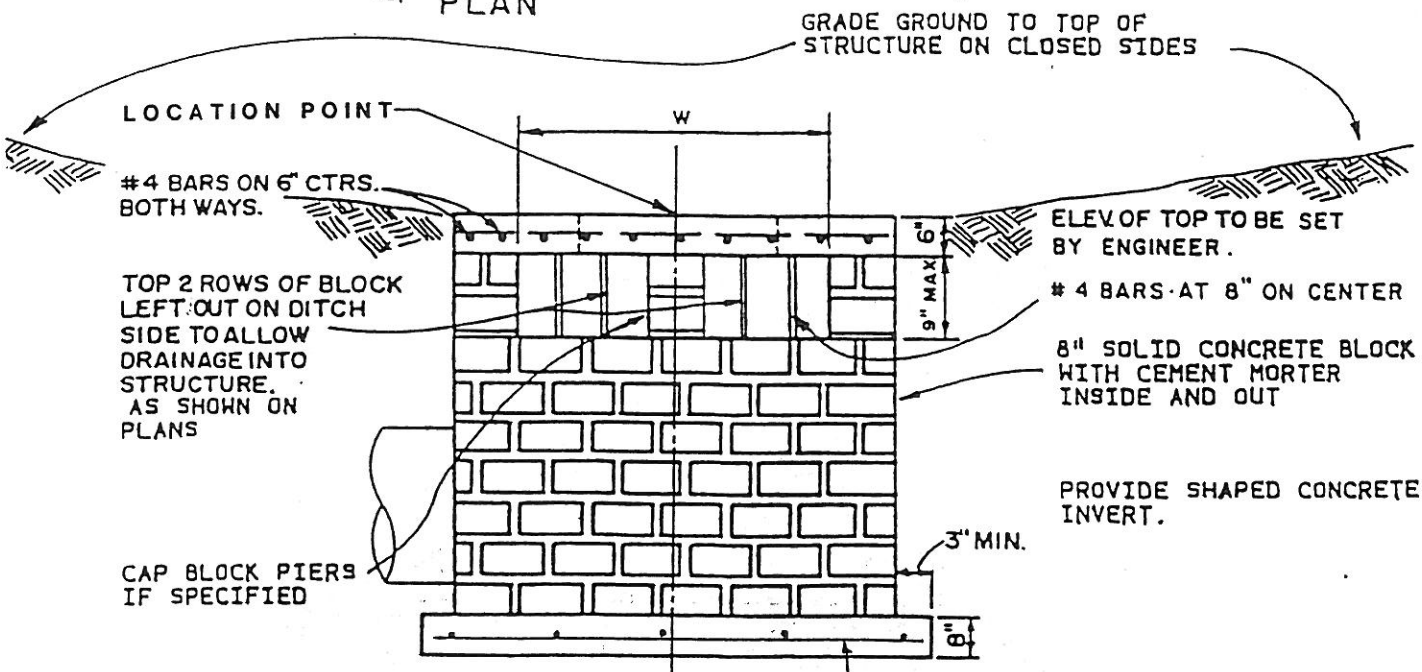

ELEVATION

CITY OF WEST DES MOINES "CROSSROADS OF THE INTERSTATES"	TYPE M-G INTAKE	REVISED : 3-94 DWG. NO. 5.6

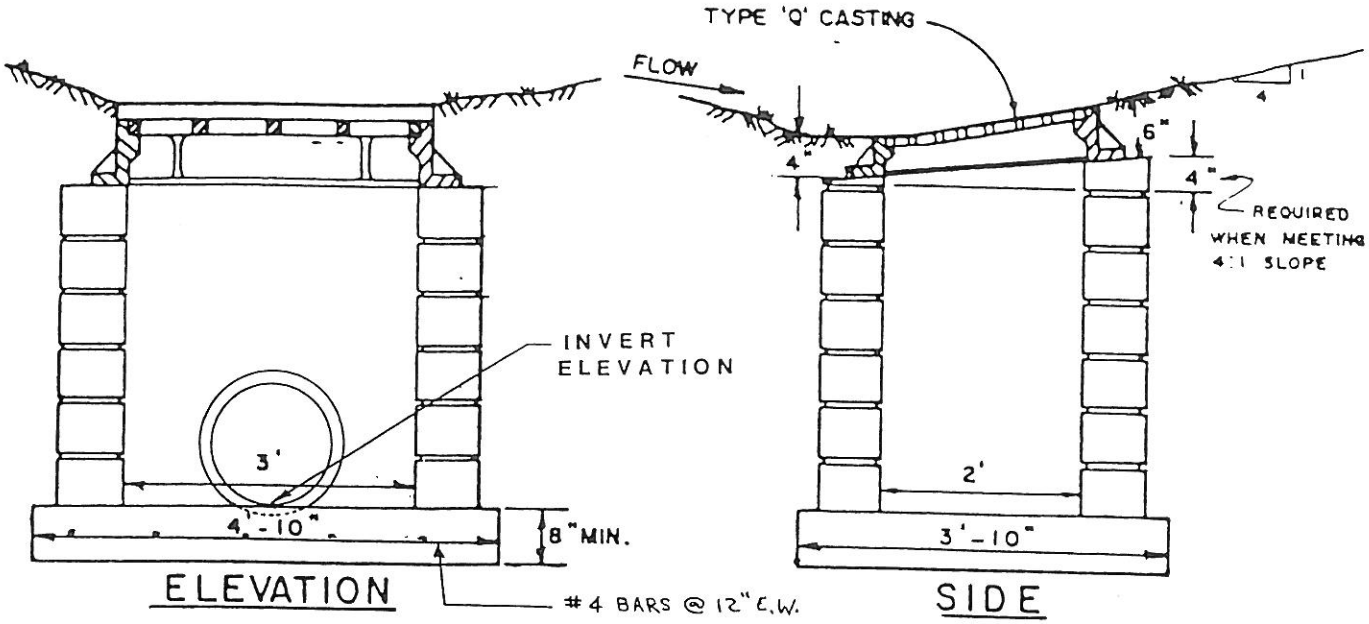

BUILD STRUCTURE AS STANDARD TYPE 'M-A' INTAKE. RECESS ENTIRE GRATE SURFACE 1" BELOW GRADE MINIMUM TO ENSURE DRAINAGE TOWARD INTAKE. (SEWER PIPES NOT SHOWN)

IF CONCRETE PAD IS SPECIFIED THE DETAIL BELOW SHALL APPLY.

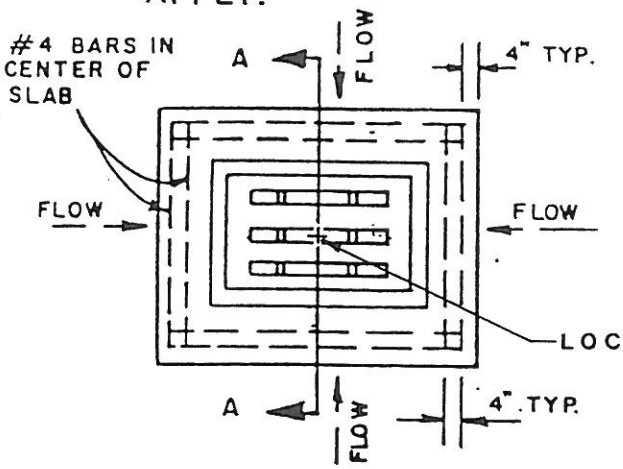

CONTRACTOR TO GRADE AND SHAPE GROUND AROUND INTAKE TO DRAIN TO INTAKE

PLAN

NOTES:

- WALLS AND BASE DIMENSIONS AND CONSTRUCTION SAME AS STD. TYPE "M-A" INTAKE. PLACE 4'X5'-6" THICK P.C. CONC. TOP AROUND CASTING.

TYPE 'Q' CASTING TO BE SET AT ELEV. SHOWN ON PLANS.

GRATE TO BE SET LEVEL.

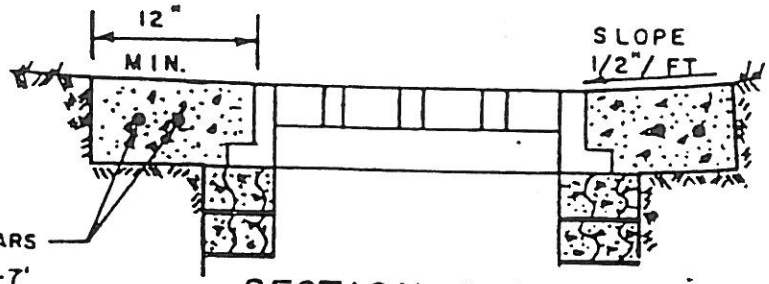

MAX. DEPTH-7'
MAX. PIPE SIZE-30" FOR 3' SIDE
18" FOR 2' SIDE

SECTION A-A

CITY OF WEST DES MOINES "CROSSROADS OF THE INTERSTATES"	TYPE M-H INTAKE	REVISED: 3-94 DWG. NO. 5.7

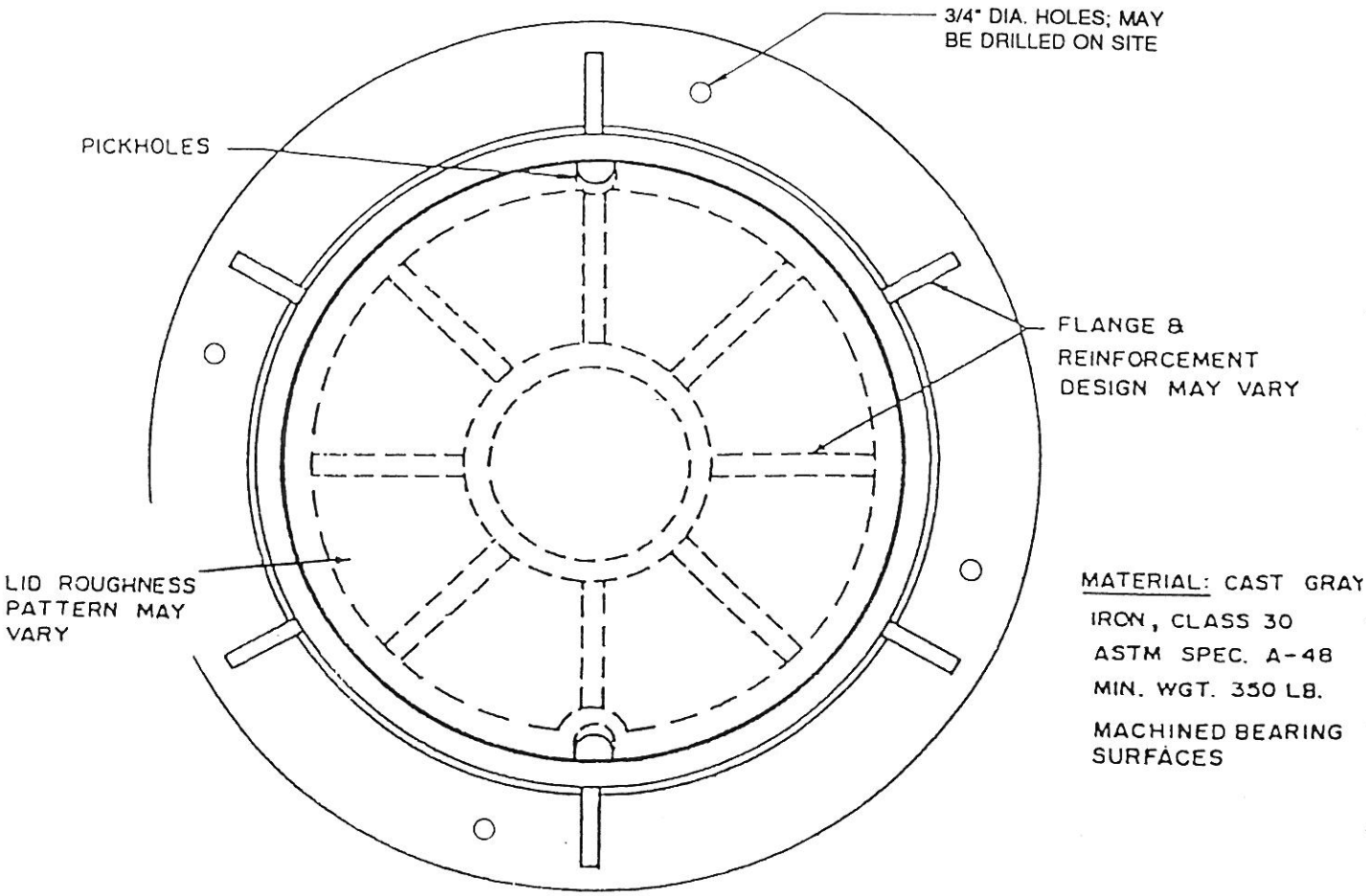

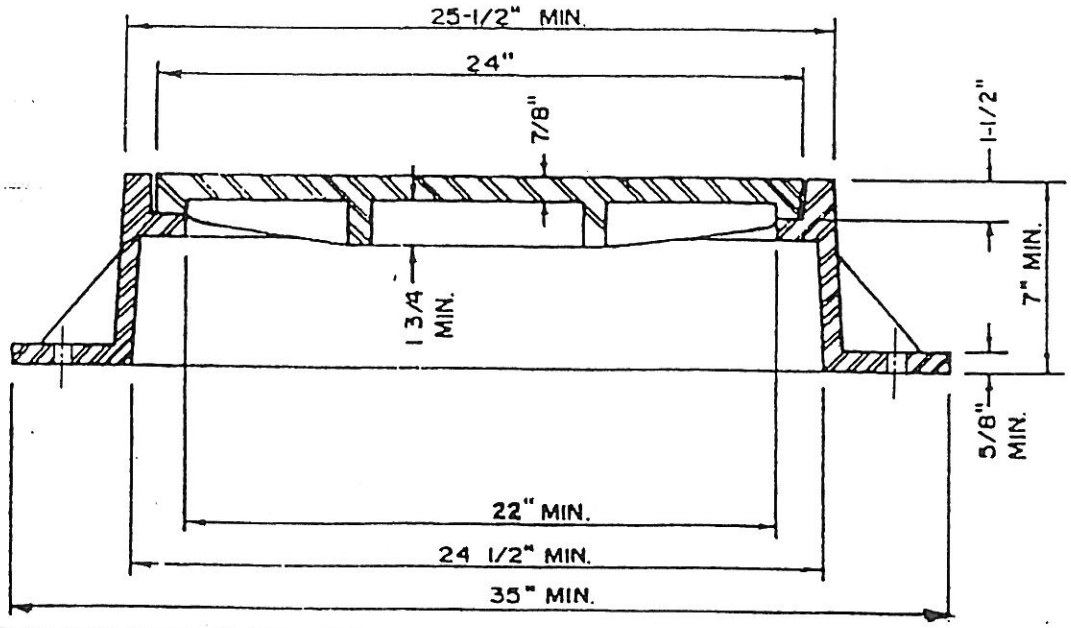

CITY OF WEST DES MOINES
"CROSSROADS OF THE INTERSTATES"

TYPE "E" CASTING
STORM SEWER

REVISED : 3-94

DWG. NO. 5.8

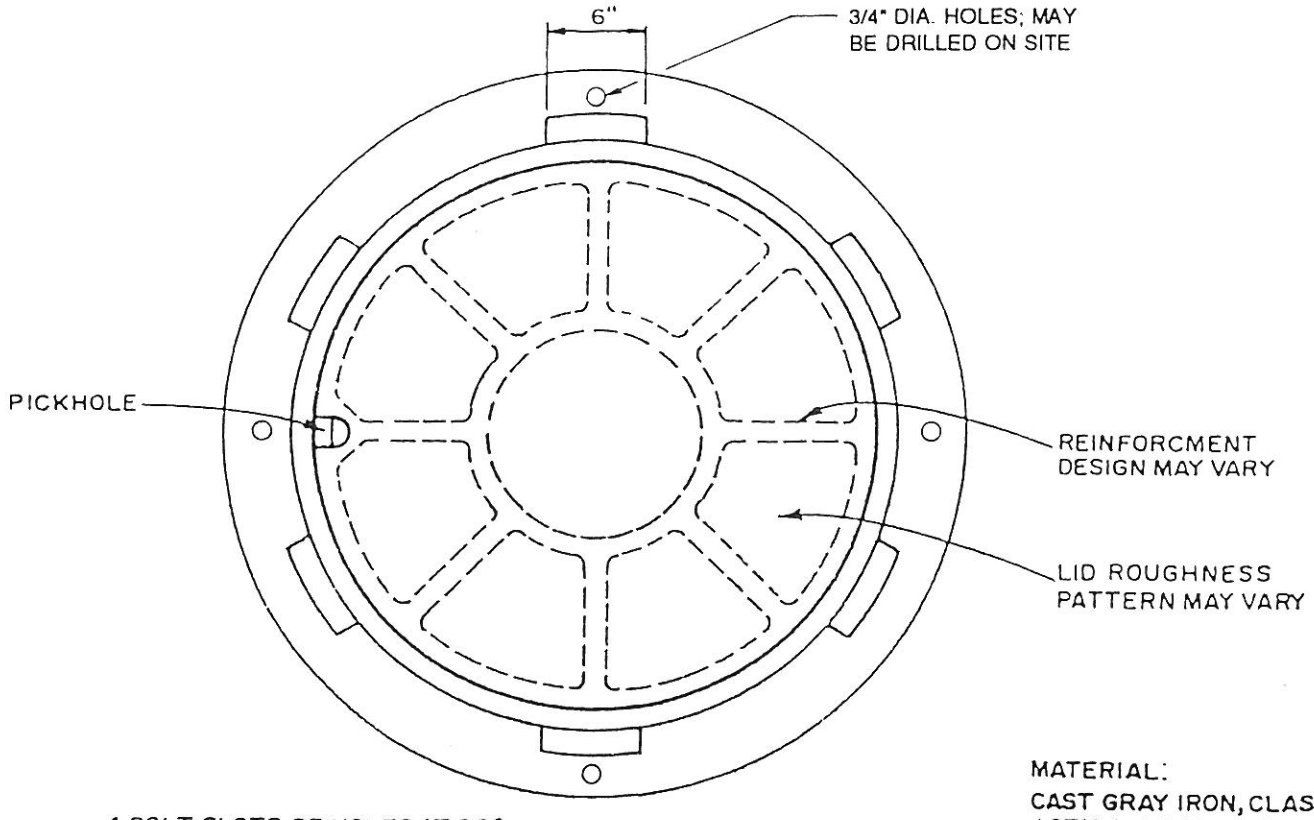

MATERIAL:
CAST GRAY IRON, CLASS 30
ASTM A-48, MIN. WT. 420 LBS.
MACHINED BEARING SURFACES

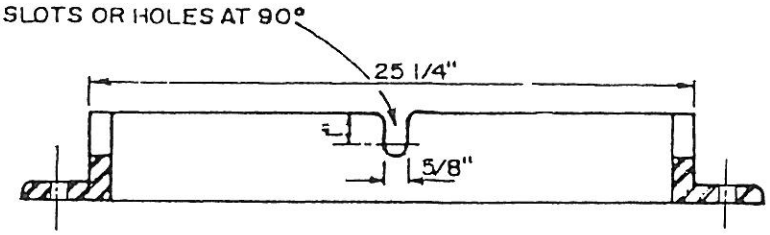

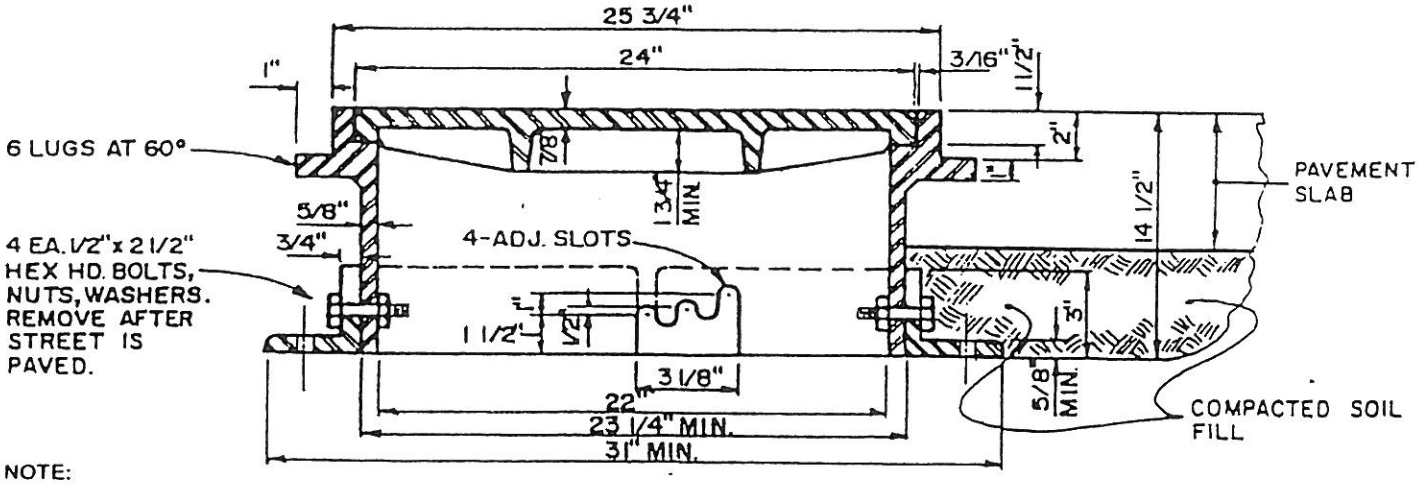

NOTE:
1. USE ONLY TYPE C CHECKERED TOP LID; RAISED DIAMOND PATTERN NOT ACCEPTABLE.

CITY OF WEST DES MOINES "CROSSROADS OF THE INTERSTATES"	TYPE "F" CASTING STORM SEWER	REVISED : 3-94 DWG. NO. 5.9

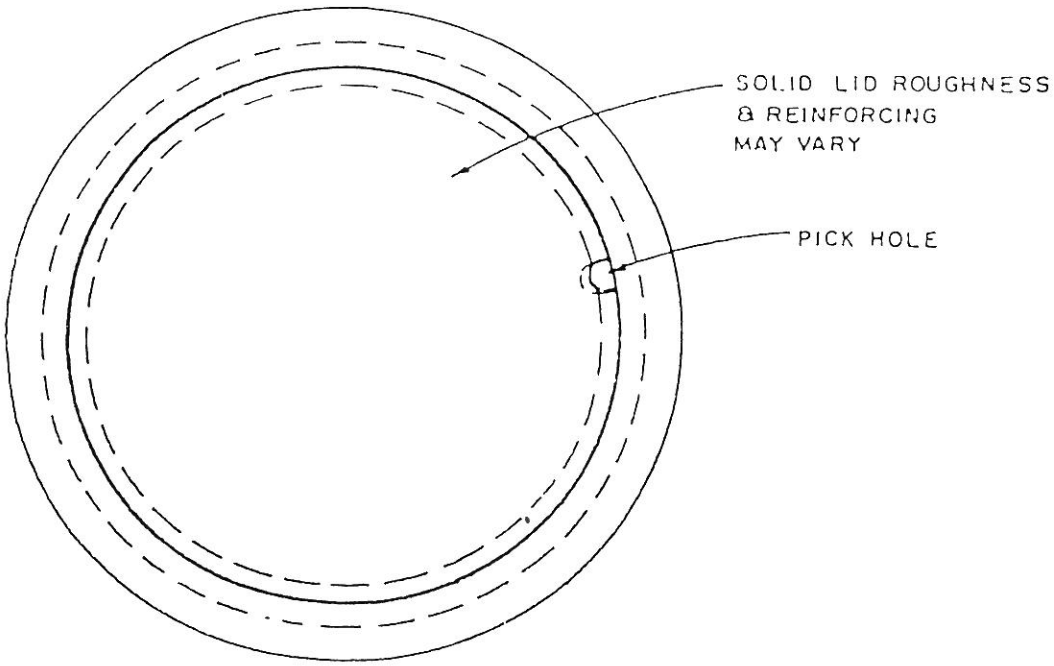

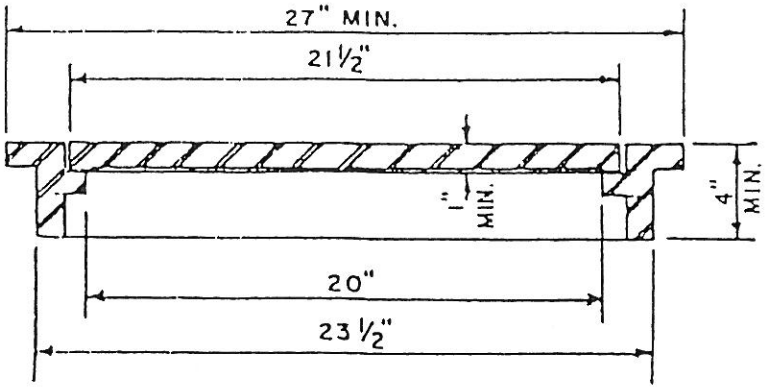

MATERIAL: CAST GRAY IRON
CLASS 30 A.S.T.M. SPEC. 48
MIN. WT. 140 LBS.
MACHINED BEARING SURFACE

CITY OF WEST DES MOINES "CROSSROADS OF THE INTERSTATES"	TYPE "G" CASTING STORM SEWER	REVISED : 3-94 DWG. NO. 5.10

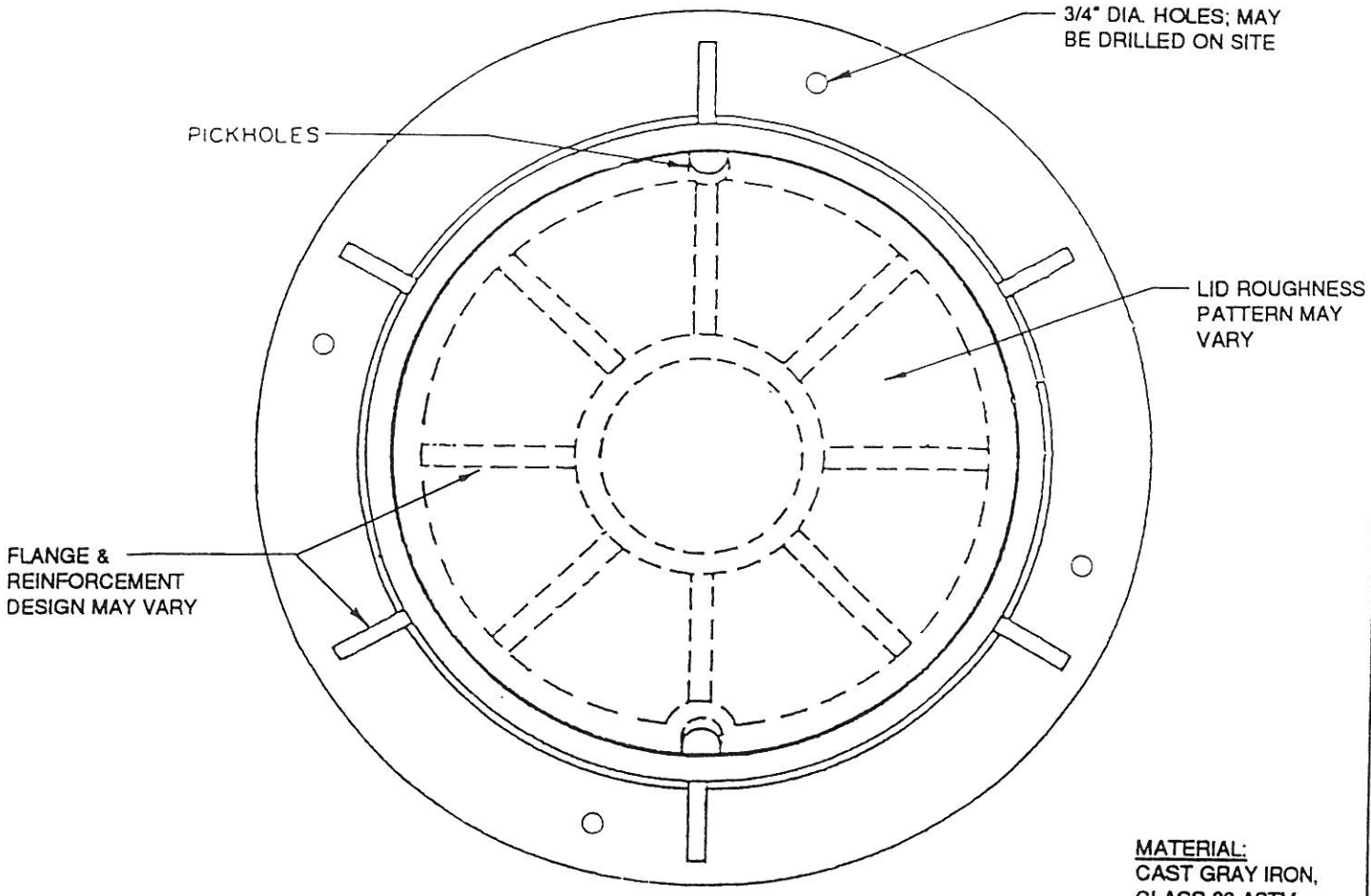

MATERIAL:
CAST GRAY IRON,
CLASS 30 ASTM
SPEC. A-48
MIN. WGT.. 95 LB.

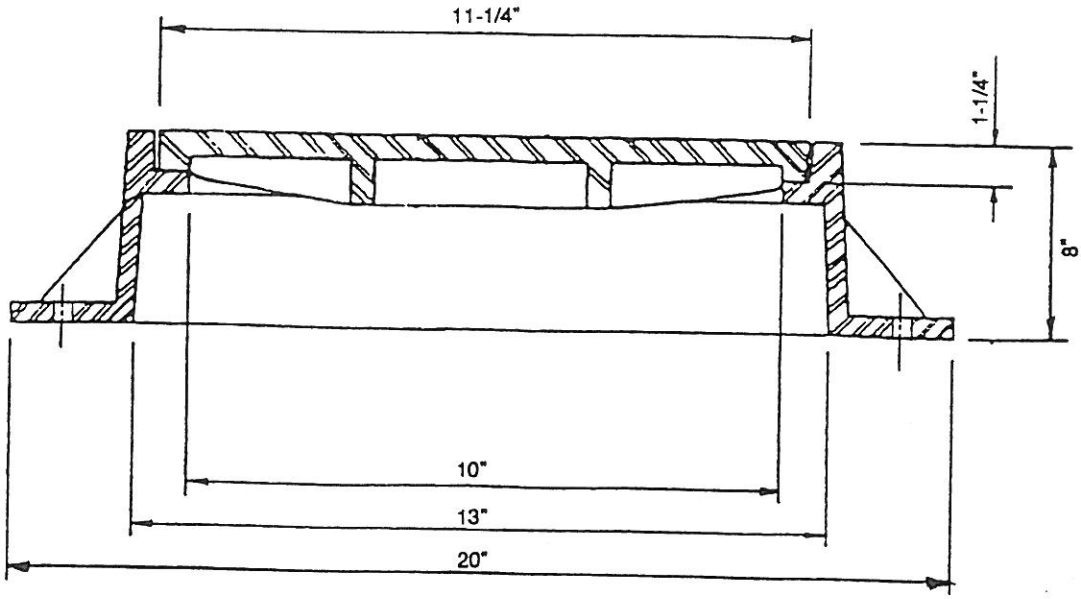

CITY OF WEST DES MOINES
"CROSSROADS OF THE INTERSTATES"

TYPE "H" CASTING
STORM SEWER

REVISED :
3-94

DWG. NO

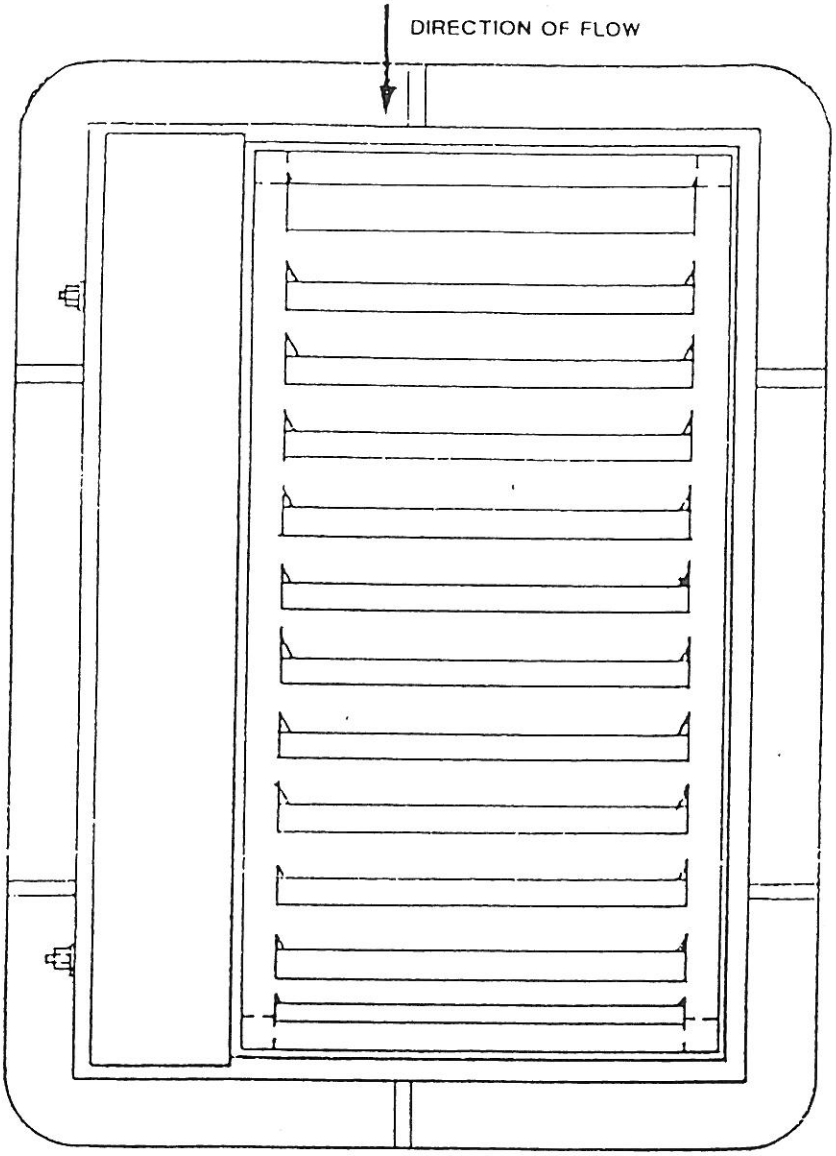

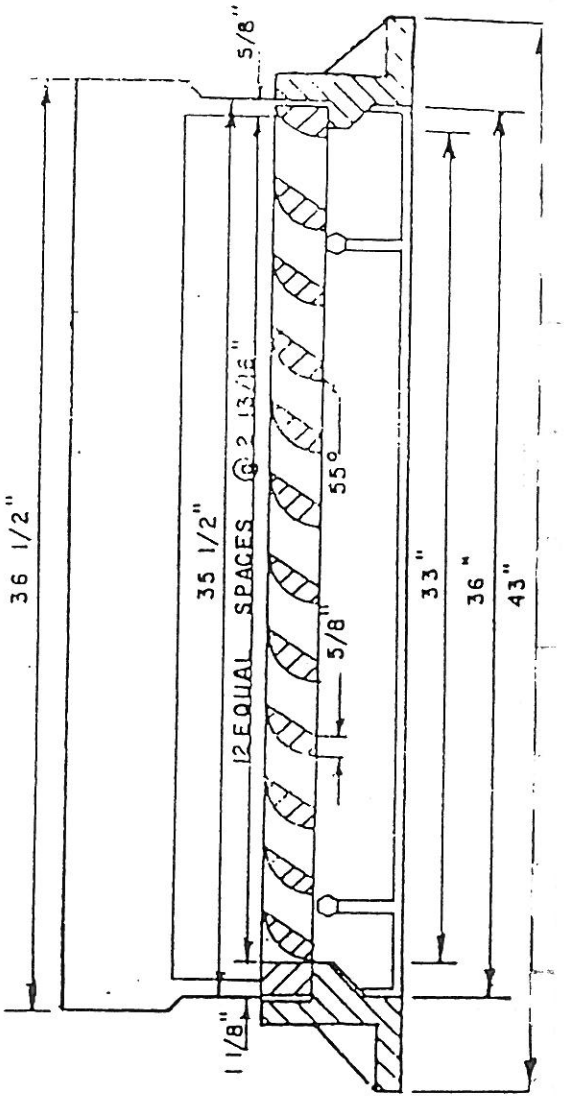

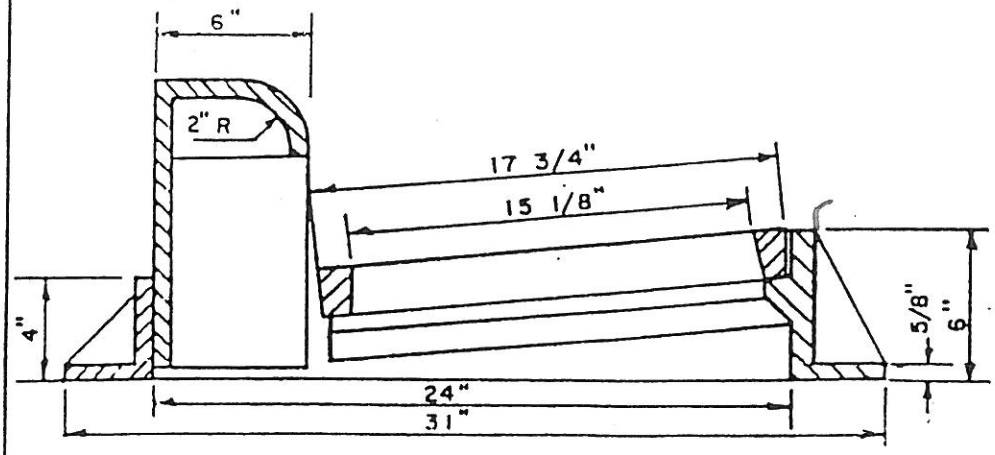

MATERIAL:

CAST GRAY IRON CLASS 30
ASTM. SPEC: A 48
MIN. WGT. 500 LBS

NOTE:

CURB BOX HEIGHT IS ADJUSTABLE TO 9"

CITY OF WEST DES MOINES "CROSSROADS OF THE INTERSTATES"	TYPE R CASTING	REVISED : 3-94 DWG. NO. 5.11

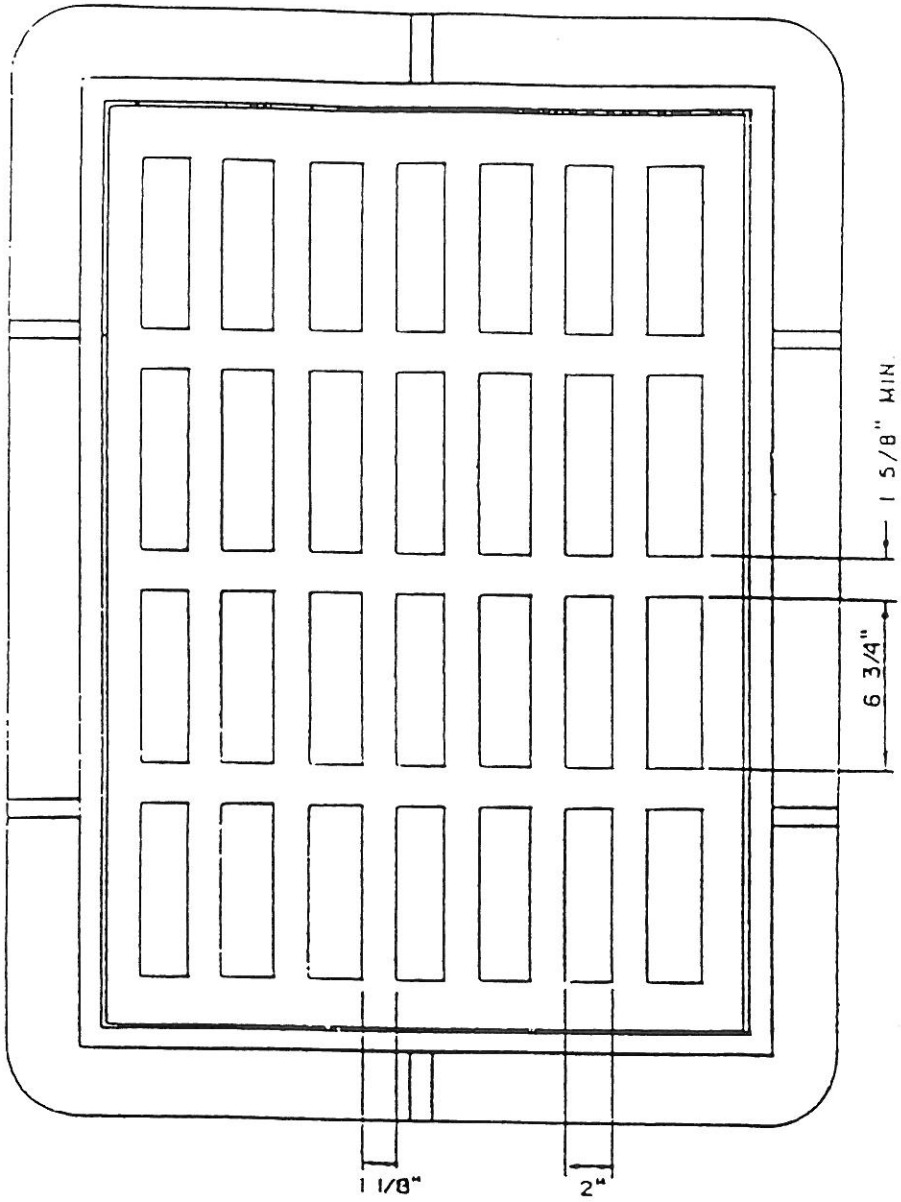

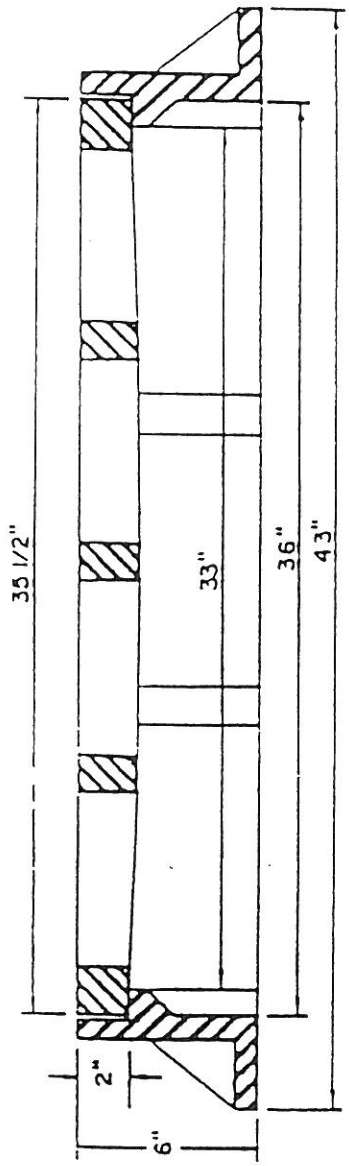

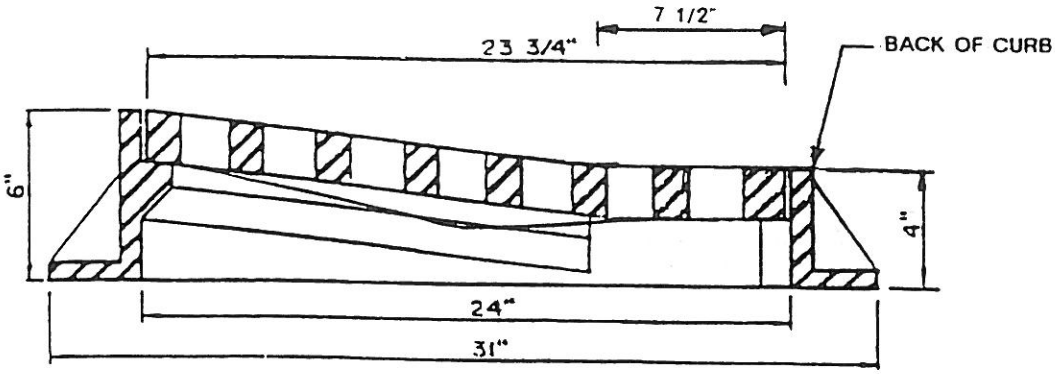

MATERIAL: CAST GRAY IRON CLASS 30.
ASTM SPEC. A-48 MIN. WEIGHT 450 LBS.

CITY OF WEST DES MOINES "CROSSROADS OF THE INTERSTATES"	TYPE Q CASTING	REVISED : 3-94 DWG. NO. 5.12

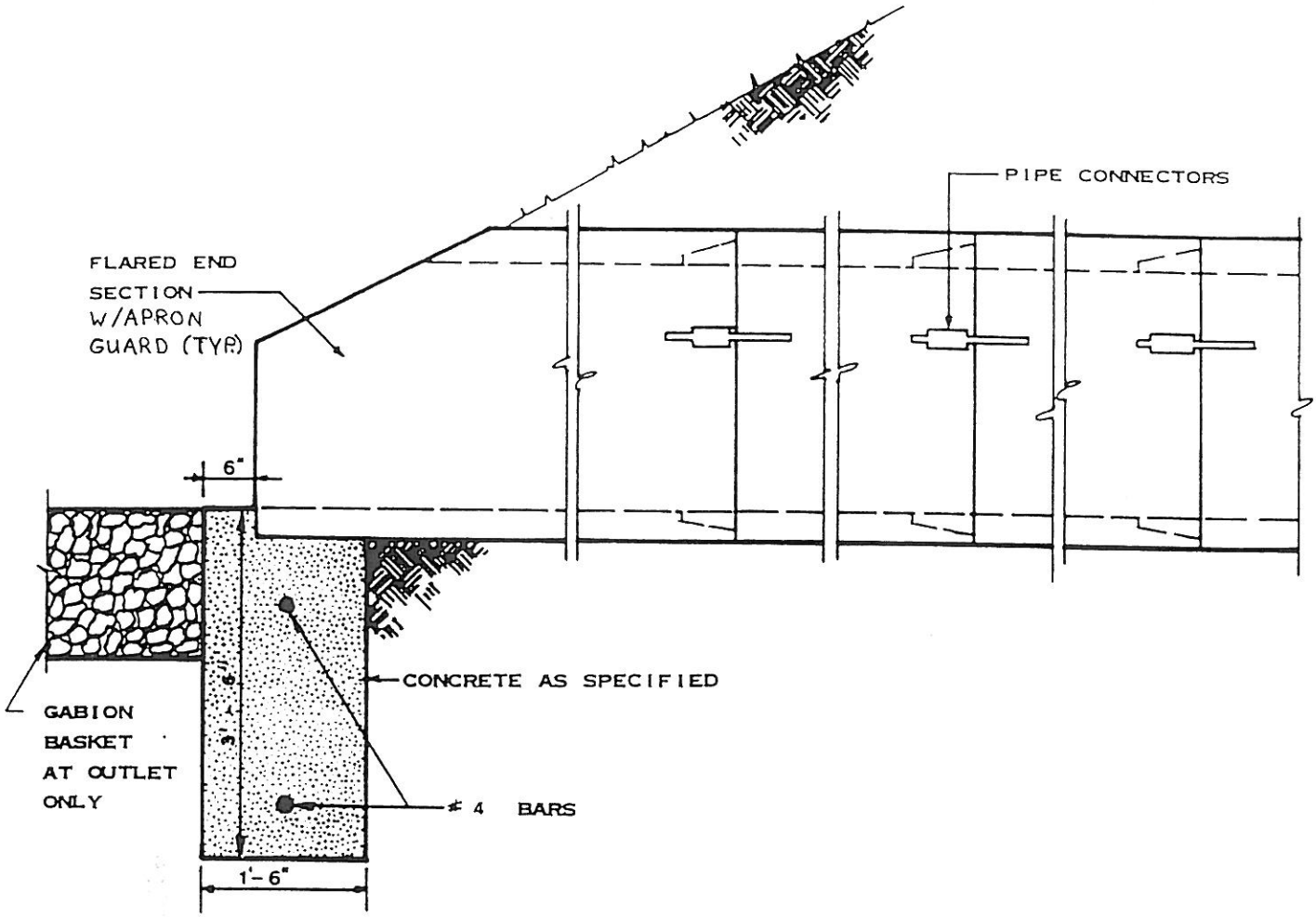

NOTES

1. INSTALL TWO PIPE CONNECTORS ON LAST THREE PIPE JOINTS AT EACH FLARED END SECTION. PIPE CONNNECTORS AS PER MANUFACTURERS RECOMMENDATIONS.
2. PROVIDE AND INSTALL GALVANIZED DIPPED APRON GUARD IN ACCORDANCE WITH IOWA DOT STANDARD ROAD PLAN RF-26 FOR ALL 36" AND SMALLER PIPE.

CITY OF WEST DES MOINES "CROSSROADS OF THE INTERSTATES"	FLARED END DETAIL	REVISED : 3-94 DWG. NO. 5.13

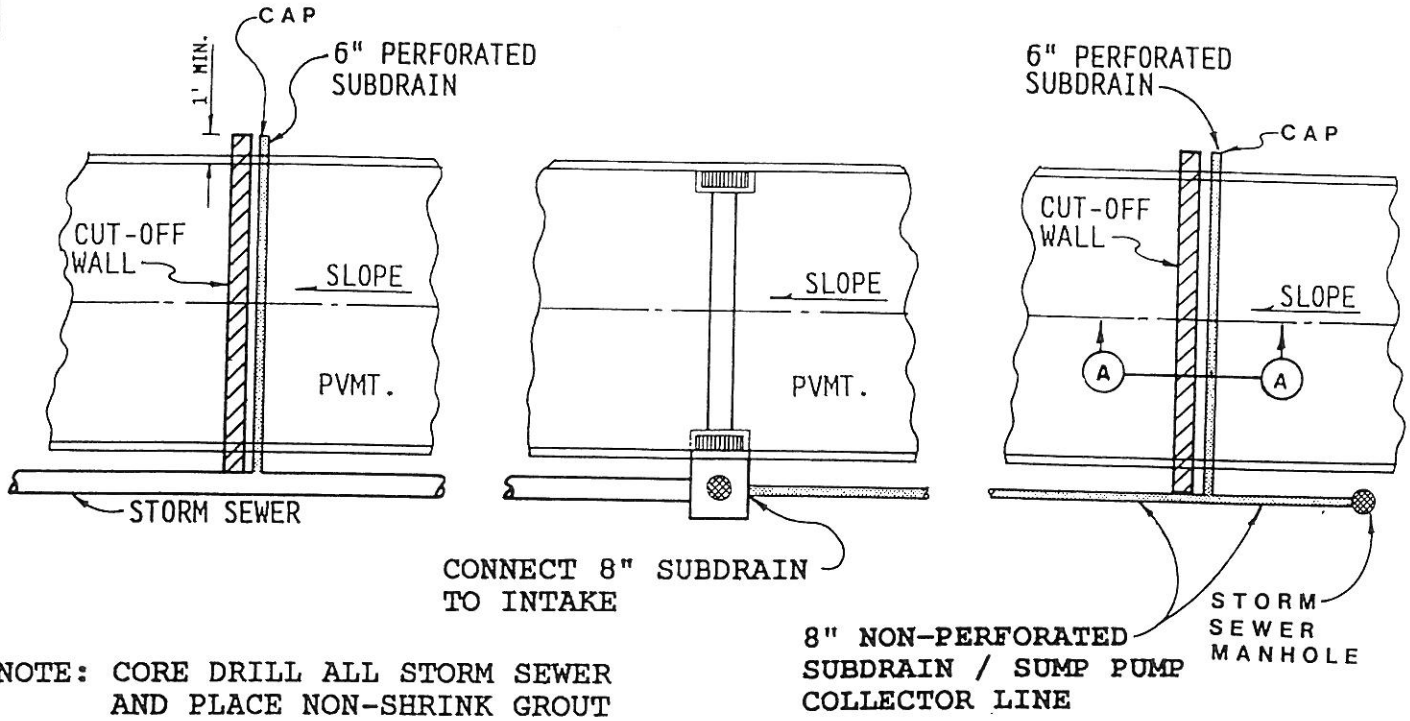

NOTE: CORE DRILL ALL STORM SEWER AND PLACE NON-SHRINK GROUT COLLAR AT CONNECTION.

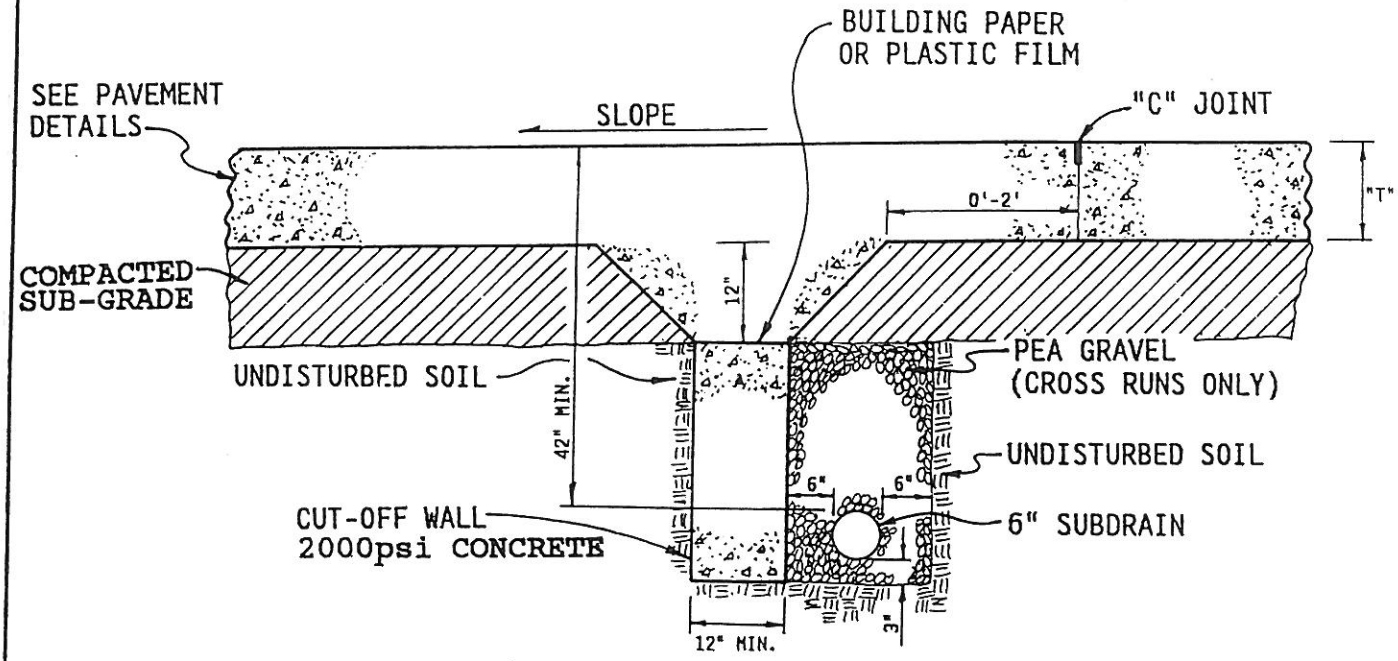

SECTION A-A

NOTES:

1. INSTALL CUT-OFF WALLS ON ALL STREETS WITH GRADES GREATER THAN 6%
2. INSTALL CUT-OFF WALLS AT A MAXIMUM OF 150' INTERVALS OR AS SHOWN ON PLANS
3. SLOPE SUBDRAIN TO DRAIN.

CITY OF WEST DES MOINES
"CROSSROADS OF THE INTERSTATES"

CUT-OFF WALL

REVISED : 3-94

DWG. NO. 5.14

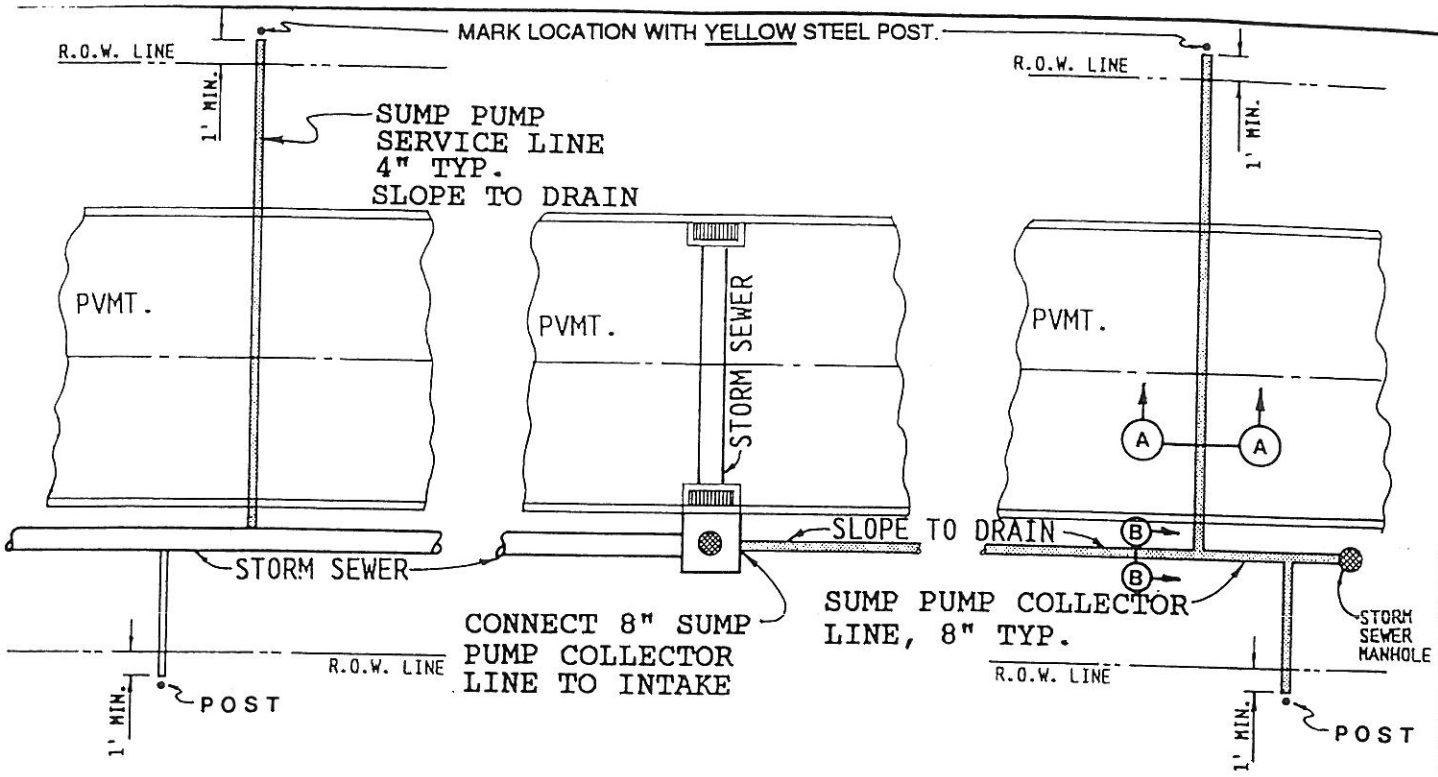

NOTE:

CORE DRILL ALL STORM SEWER AND PLACE NON-SHRINK GROUT COLLAR AT CONNECTION.

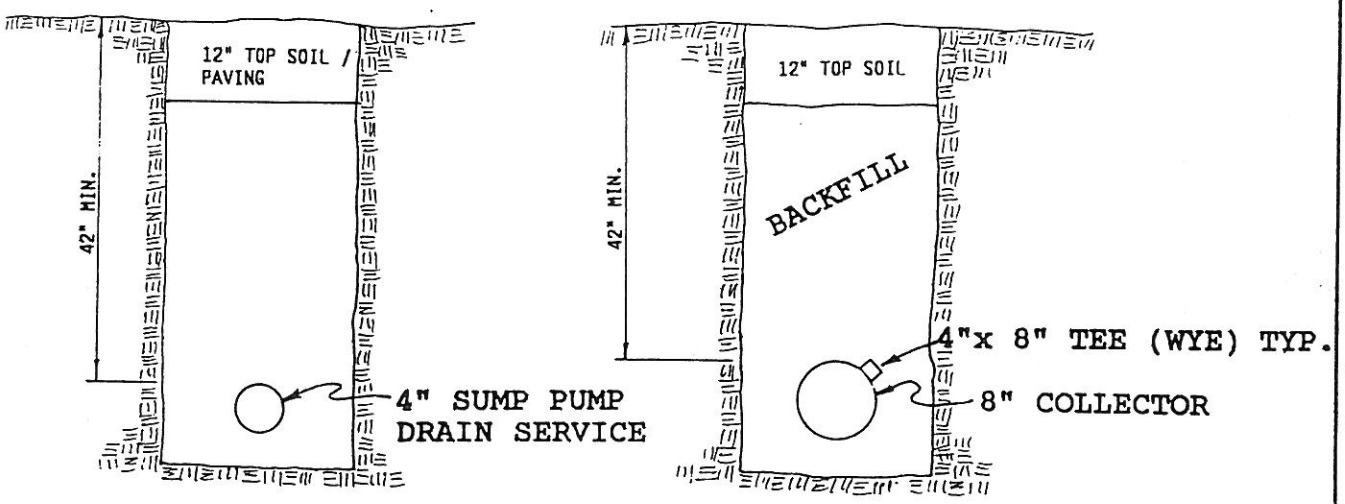

SECTION A-A

SECTION B-B

NOTE:

1. ALL CONNECTIONS MADE OF DISIMILAR PIPE- USE APPROVED RUBBER GASKETED FITTINGS.
2. CAP ALL SERVICE LINES.

CITY OF WEST DES MOINES "CROSSROADS OF THE INTERSTATES"	SUMP PUMP DRAIN LINES	REVISED : 3-94 DWG. NO. 5.15

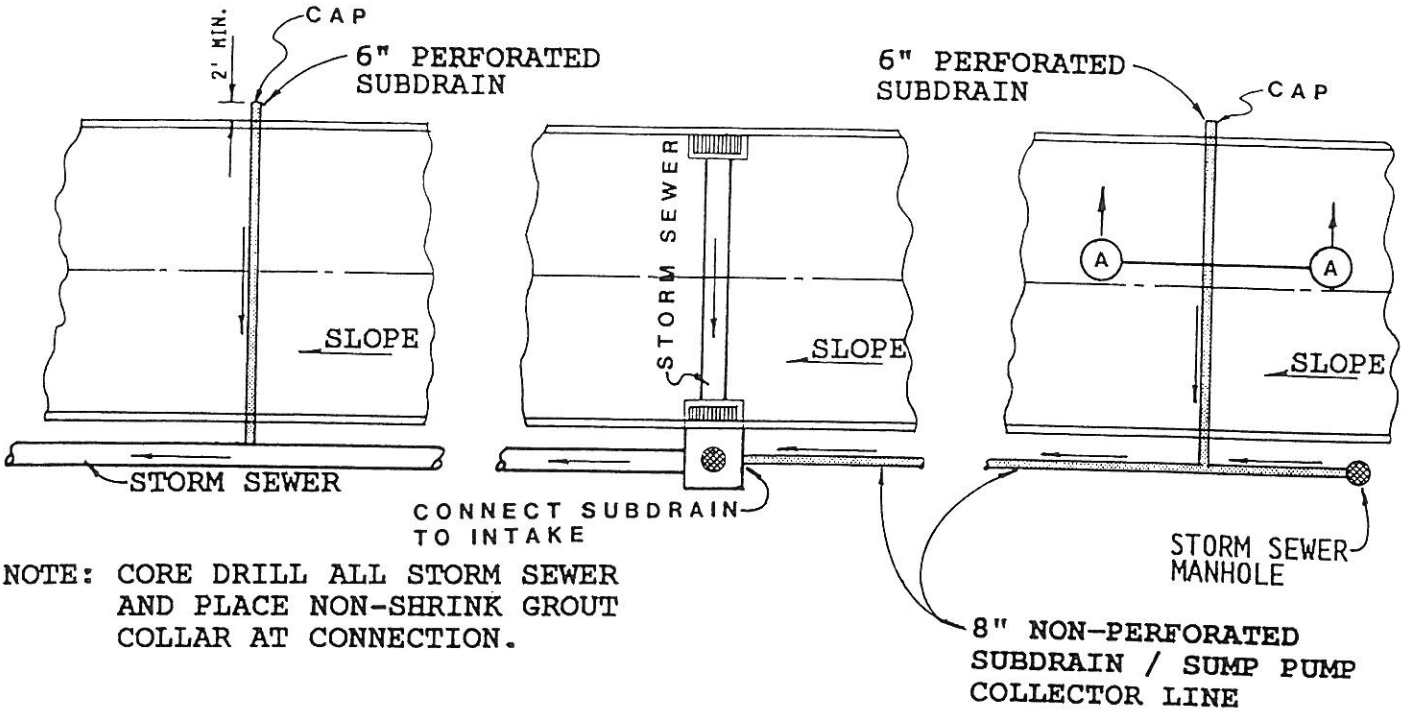

NOTE: CORE DRILL ALL STORM SEWER AND PLACE NON-SHRINK GROUT COLLAR AT CONNECTION.

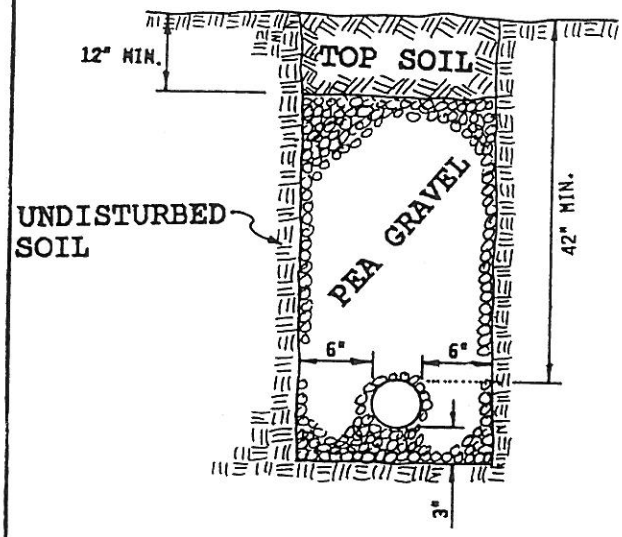

USE AS SHOWN ON PLANS

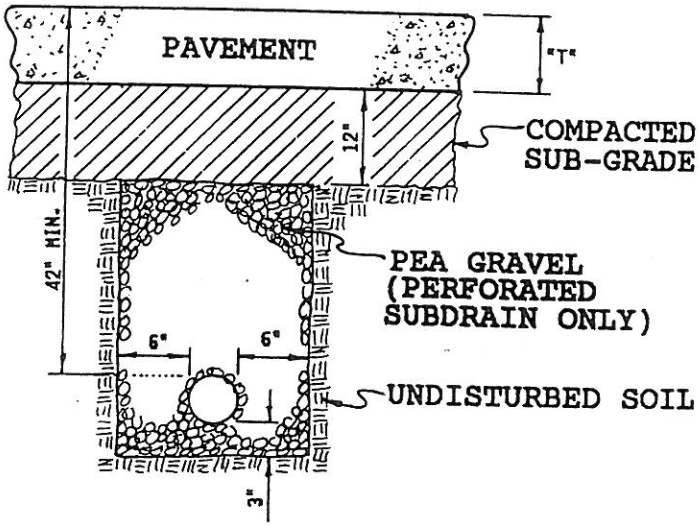

SECTION A-A

NOTES:

1. SLOPE SUBDRAINS TO DRAIN

CITY OF WEST DES MOINES
"CROSSROADS OF THE INTERSTATES"

SUBDRAINS

REVISED : 3-94

DWG. NO. 5.16

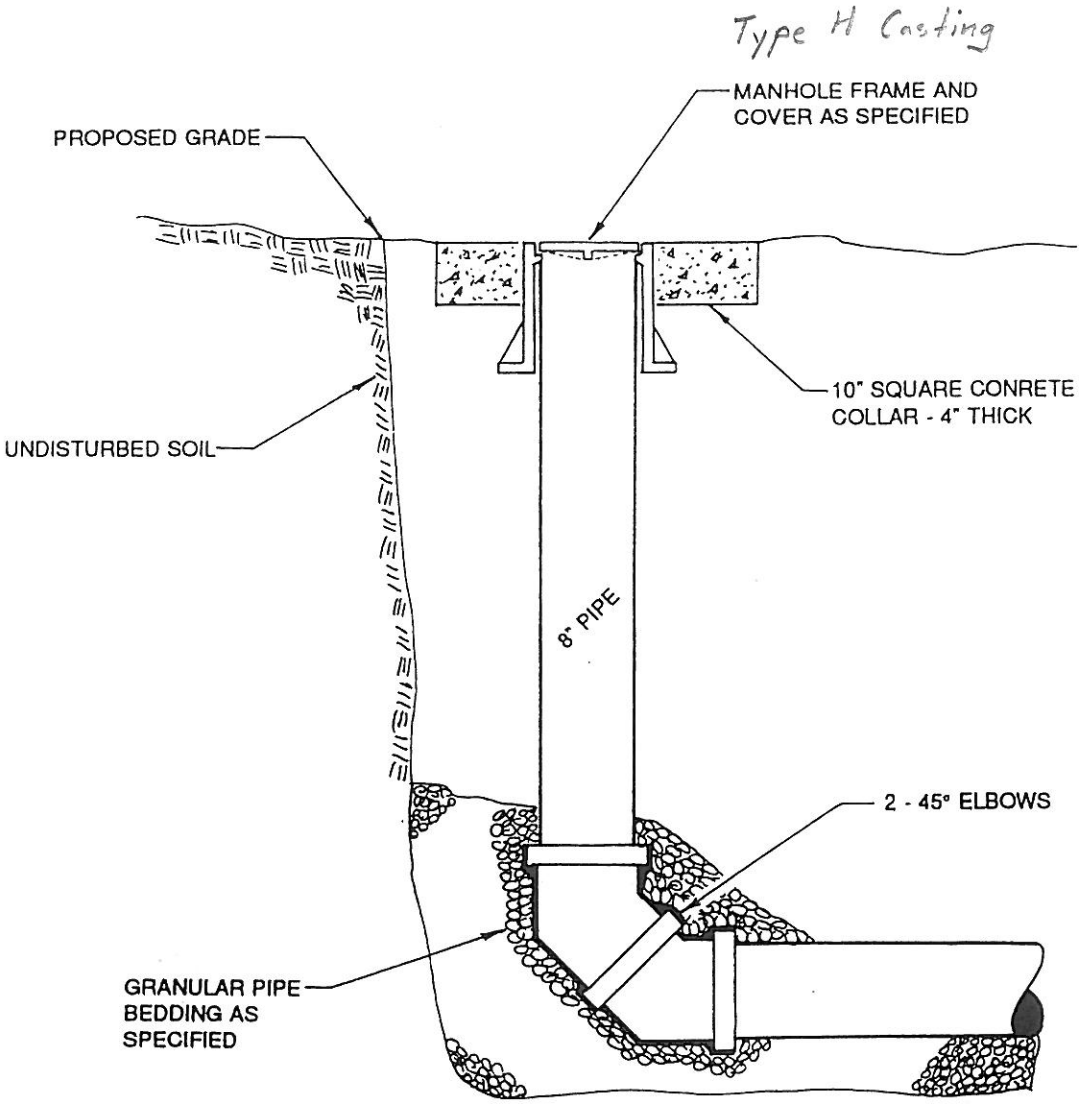

NOTES:
1. FOR USE IN LIEU OF MANHOLE FOR END OF LINE FOR SUMP PUMP DRAINLINES AND SUBDRAINS ONLY

CITY OF WEST DES MOINES "CROSSROADS OF THE INTERSTATES"	**CLEAN OUT**	REVISED : 3-94 DWG. NO. 5.17

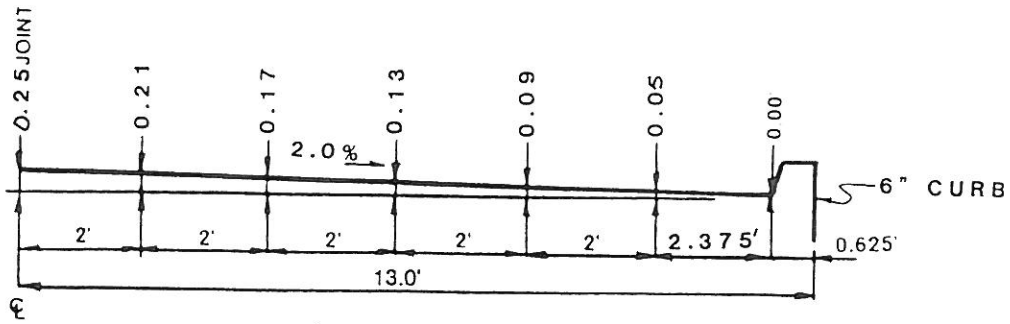

0.25 (3⅛") CROWN / 26' B-B

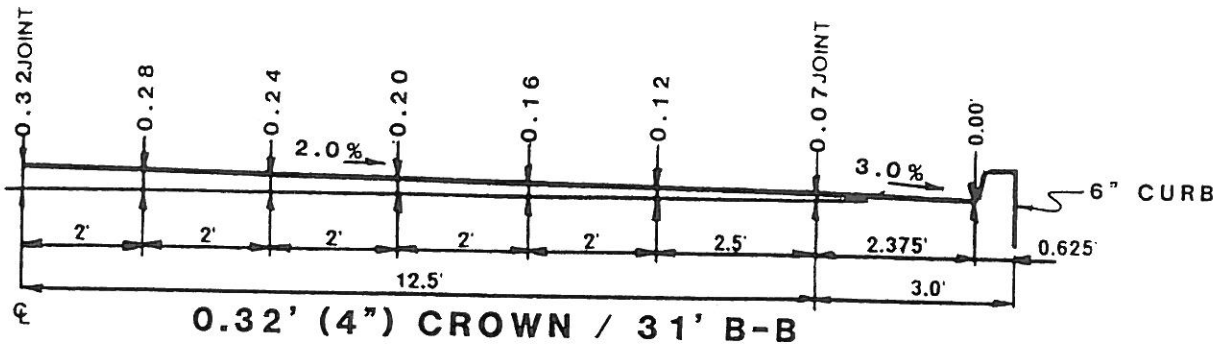

0.32' (4") CROWN / 31' B-B

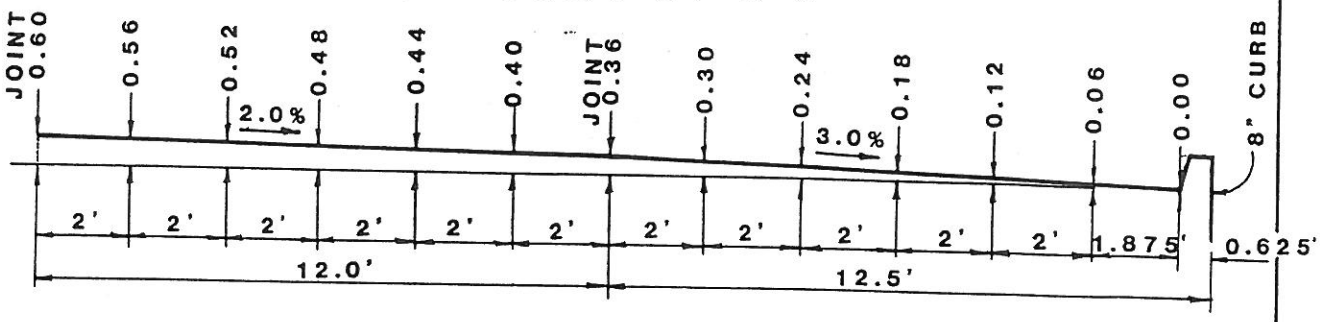

0.60' (7½") CROWN 49' B-B

NOTE:

1. CROWN ORDINATES ARE GIVEN IN DECIMALS OF A FOOT.
2. SLIGHTLY ROUND ALL GRADE BREAKS.

CITY OF WEST DES MOINES
"CROSSROADS OF THE INTERSTATES"

STREET CROWN TEMPLATES

REVISED: 3-94

DWG. NO. 7.1

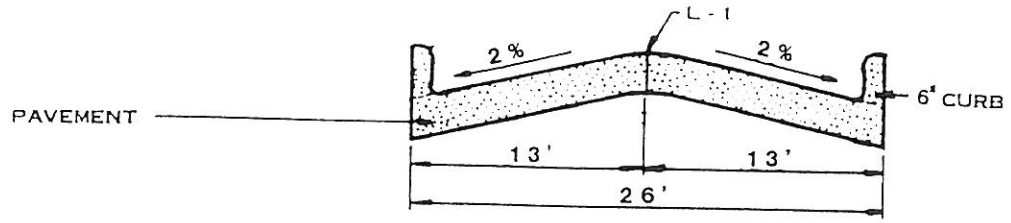

SECTION

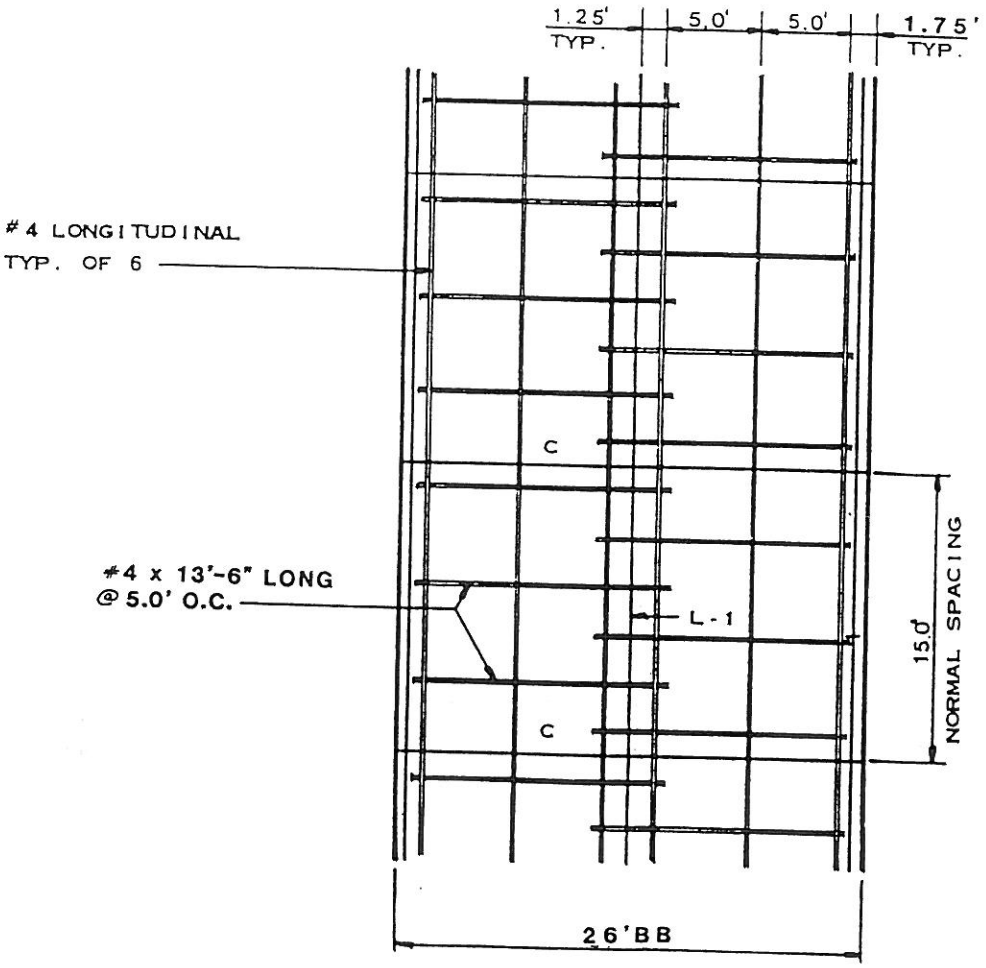

PLAN

CITY OF WEST DES MOINES "CROSSROADS OF THE INTERSTATES"	PORTLAND CEMENT CONCRETE PAVEMENT DETAILS - 26' STREET	REVISED 3-94 DWG. NO. 7.2

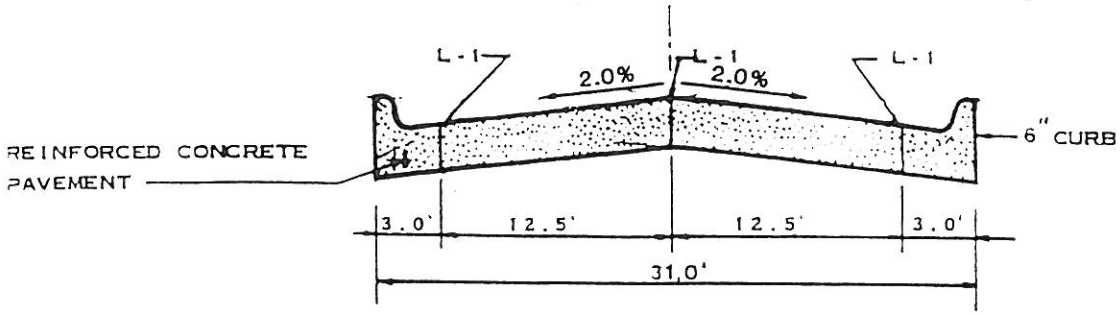

SECTION

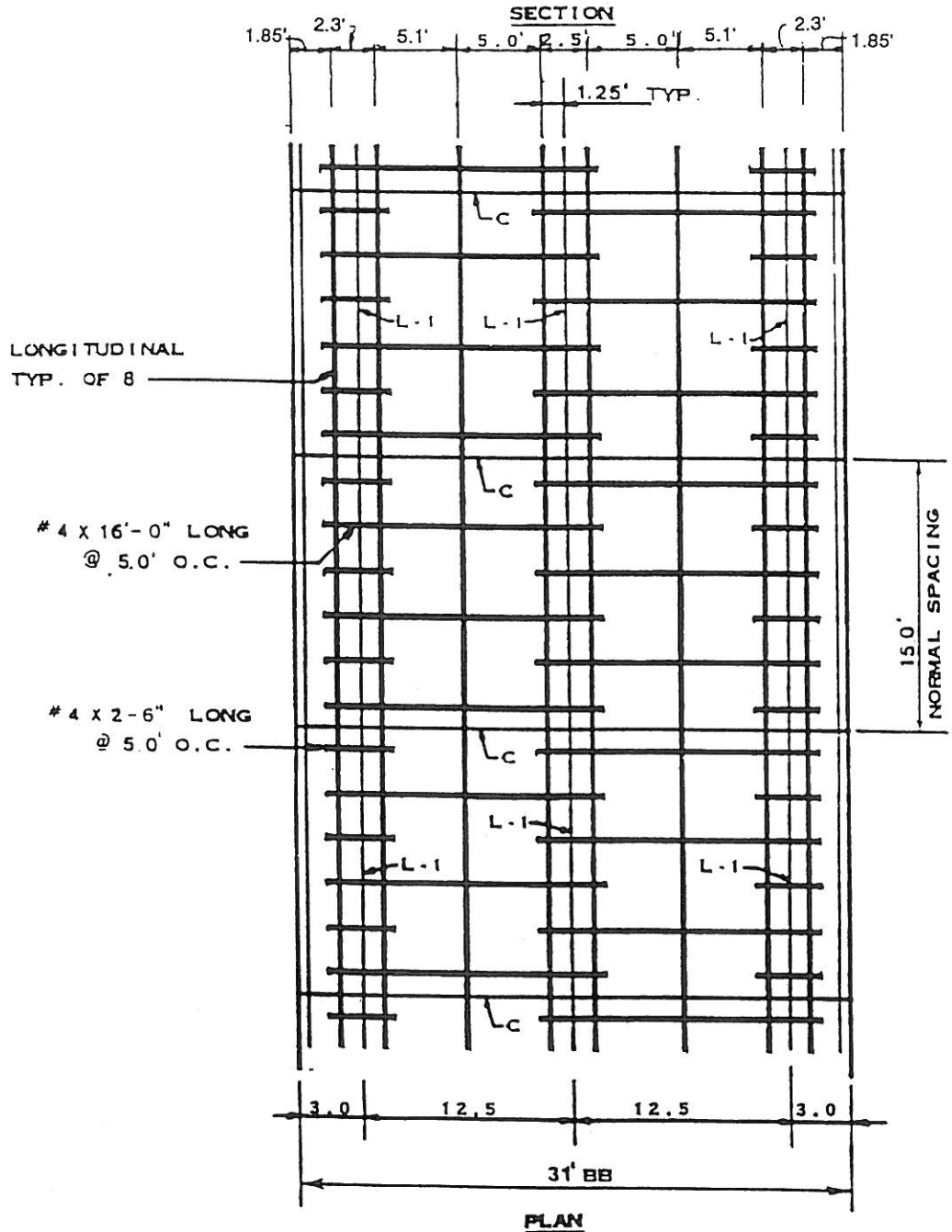

PLAN

CITY OF WEST DES MOINES
"CROSSROADS OF THE INTERSTATES"

PORTLAND CEMENT CONCRETE PAVEMENT DETAILS - 31' STREET

REVISED : 3-94

DWG. NO. 7.4

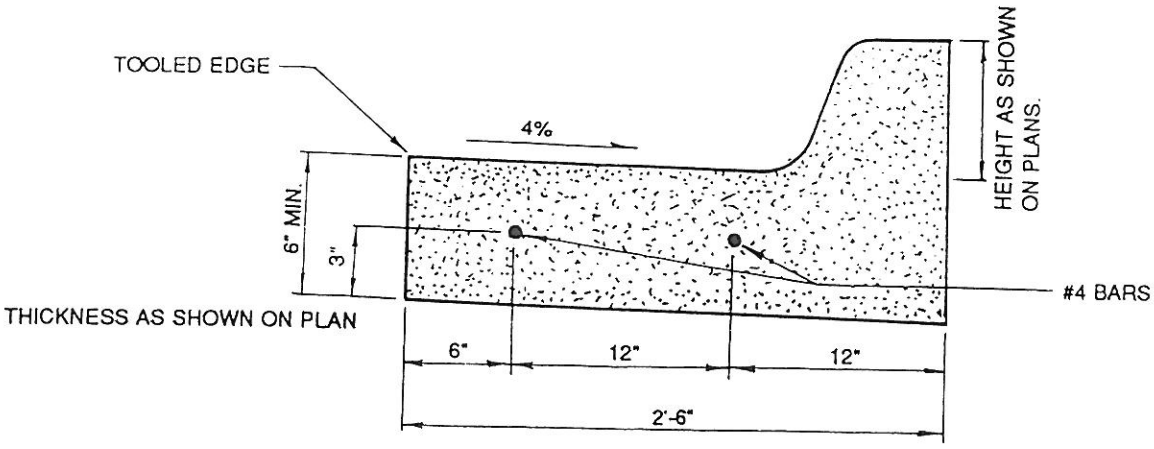

CURB AND GUTTER

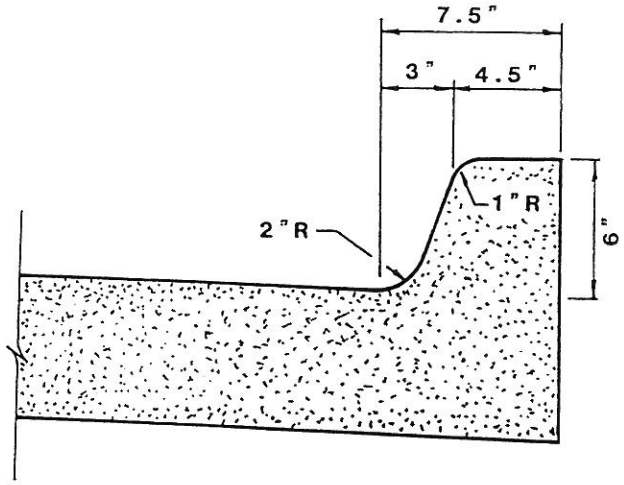

6" CURB

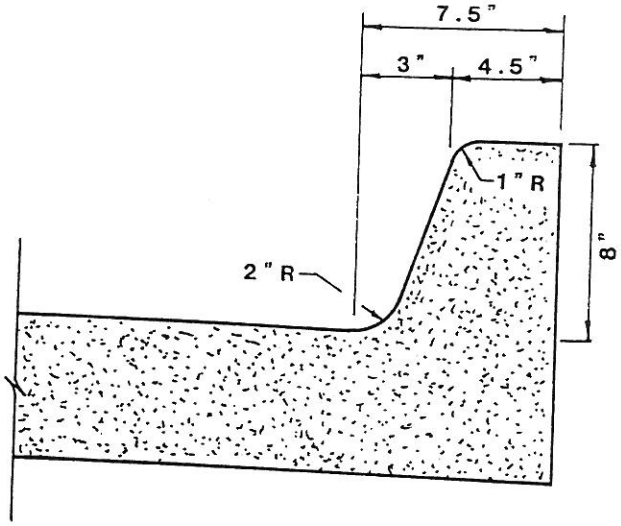

8" CURB

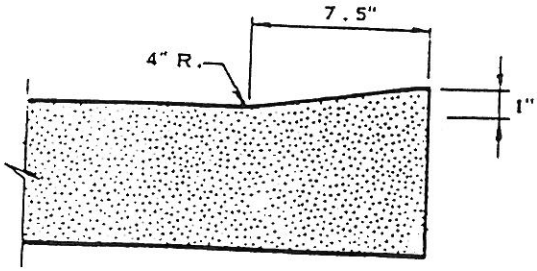

HANDICAP RAMP

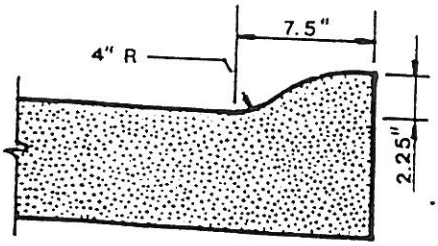

DEPRESSED CURB DRIVEWAYS

CITY OF WEST DES MOINES

"CROSSROADS OF THE INTERSTATES"

CURB DETAILS

REVISED : 3-94

DWG. NO. 7.5

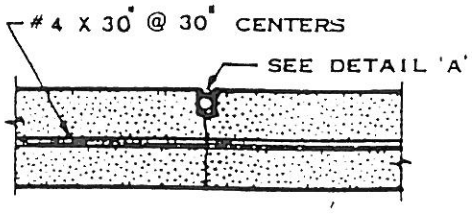

L-1

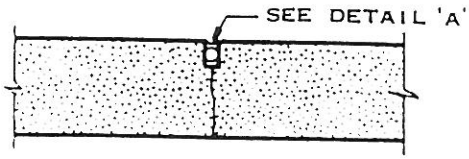

C

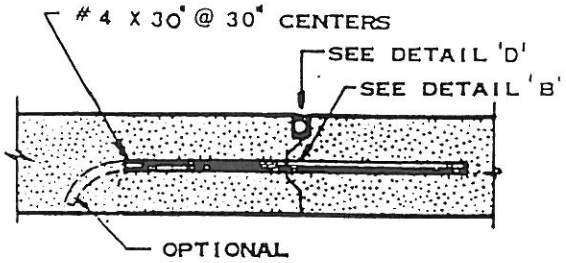

KD-1

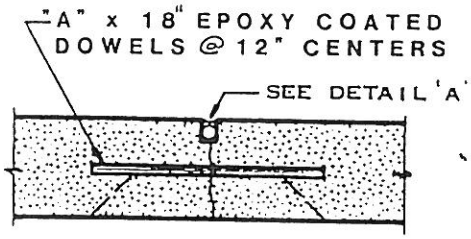

CD

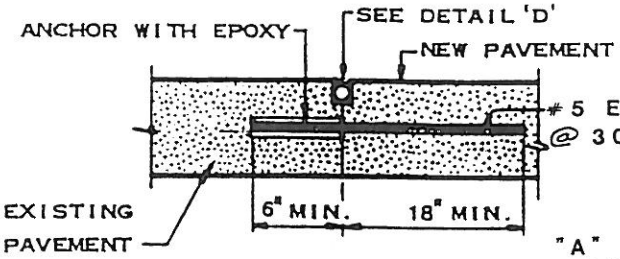

BD

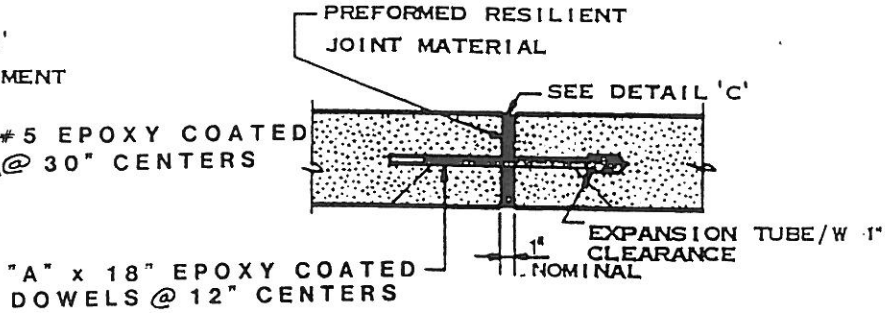

ED

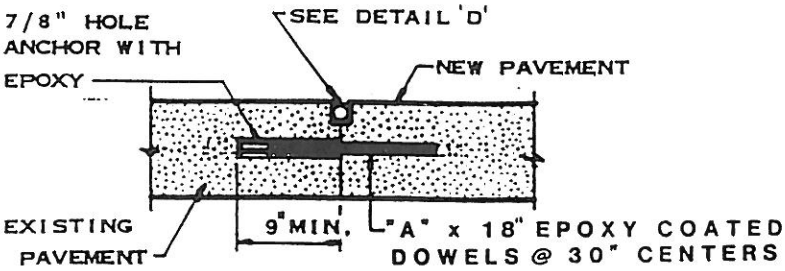

BD-2

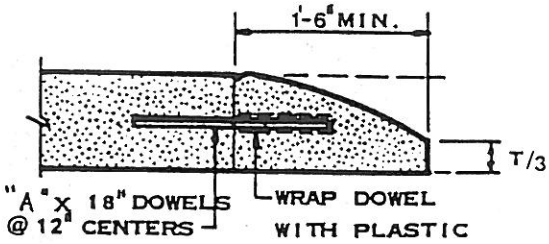

HD-1

NOTES:
1. ALTERNATE EXPANSION TUBES ON "ED" JOINT.
2. "A" = 1/8" x PAVEMENT THICKNESS IN INCHES.
3. CENTER ALL REINFORCING STEEL UNLESS OTHERWISE NOTED.

CITY OF WEST DES MOINES "CROSSROADS OF THE INTERSTATES"	PORTLAND CEMENT CONCRETE PAVEMENT JOINT DETAILS 1 OF 2	REVISED : 3-94 DWG. NO.

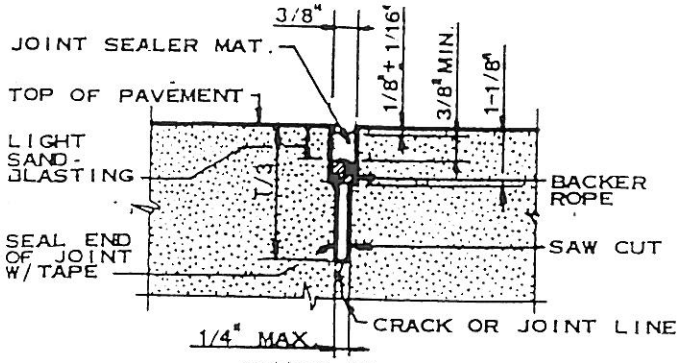

DETAIL 'A'

*Full Depth 3/8" Saw Cut Allowed

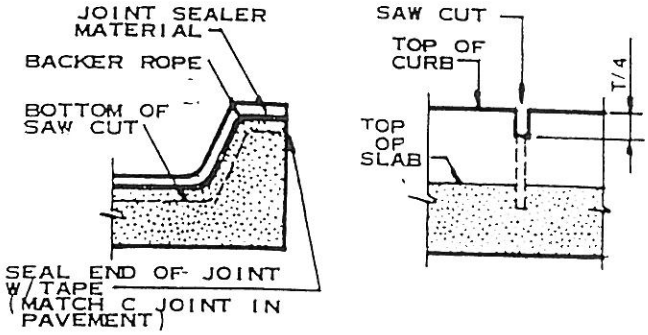

C JOINT IN CURB

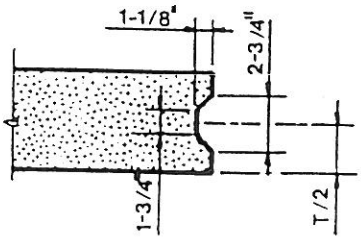

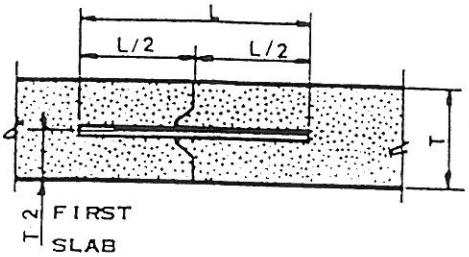

DETAIL 'B'

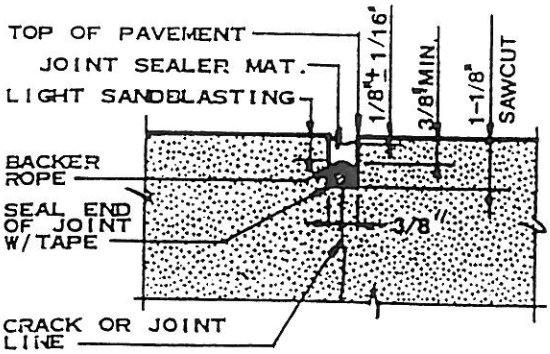

DETAIL 'D'

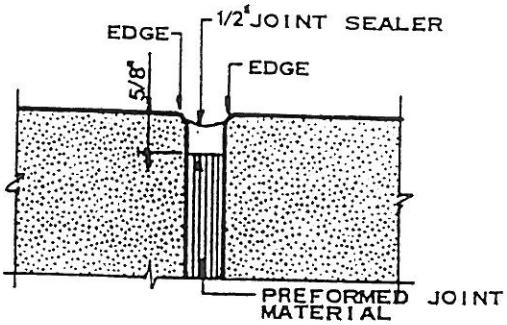

DETAIL 'C'

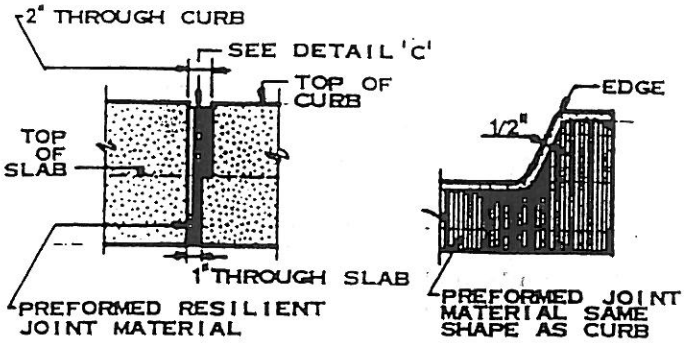

E JOINTS IN CURB

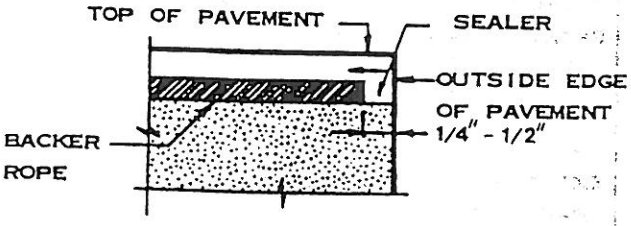

SECTION THRU JOINT AT PAVEMENT EDGE

NOTES

1. EDGE WITH 1/4" RADIUS TOOL FOR LENGTH OF JOINT WHERE NOTED.

CITY OF WEST DES MOINES

"CROSSROADS OF THE INTERSTATES"

PORTLAND CEMENT CONCRETE PAVEMENT JOINT DETAILS 2 OF 2

REVISED 3-94

DWG. NO. 7.7

NOTES

1. DUE TO THE ORDER OF CONSTRUCTION THE FOLLOWING JOINTS MAYBE INTERCHANGEABLE; CD WITH C AND L-1 WITH KD-1

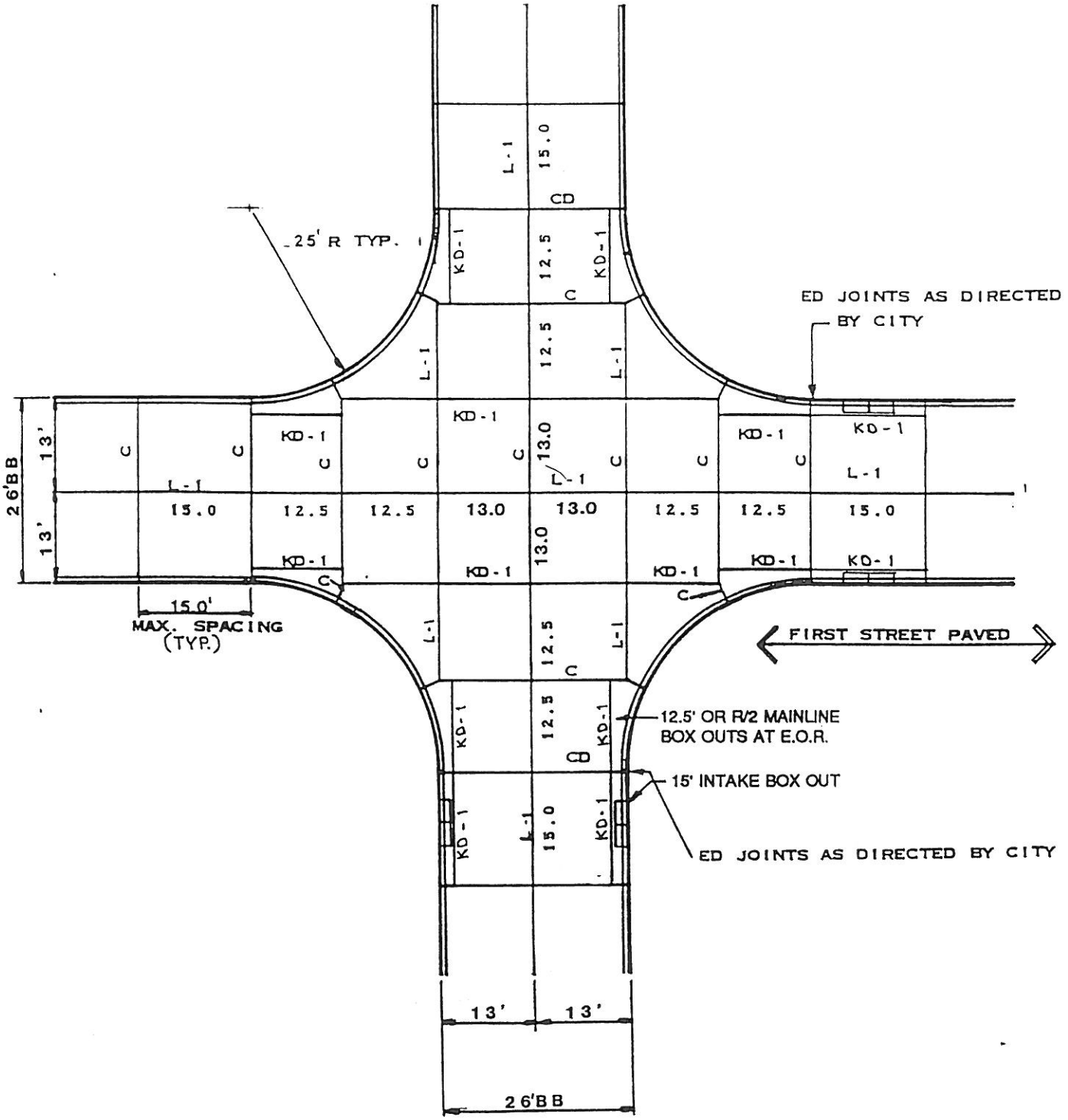

CITY OF WEST DES MOINES
"CROSSROADS OF THE INTERSTATES"

PORTLAND CEMENT CONCRETE PAVEMENT
INTERSECTION DETAILS
26' STREET

REVISED : 3-94

DWG. NO.

NOTES

1. DUE TO THE ORDER OF CONSTRUCTION THE FOLLOWING JOINTS MAYBE INTERCHANGEABLE; CD WITH C AND L-1 WITH KD-1

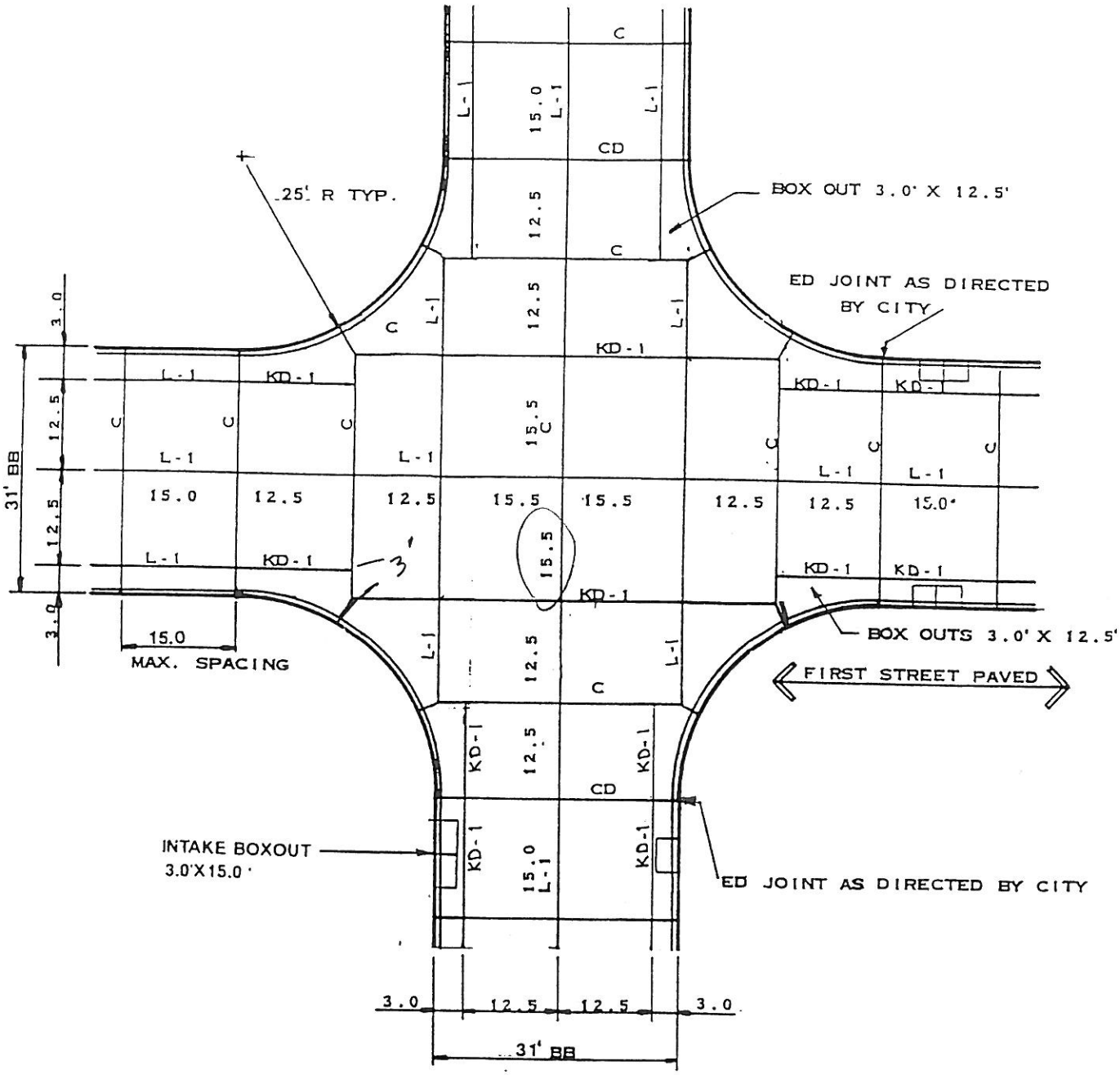

CITY OF WEST DES MOINES "CROSSROADS OF THE INTERSTATES"	PORTLAND CEMENT CONCRETE PAVEMENT INTERSECTION DETAILS 31' STREET	REVISED : 3-94 DWG. NO. 7.10

Estate lots - 1000'

K-1 - 800'

All others 660'

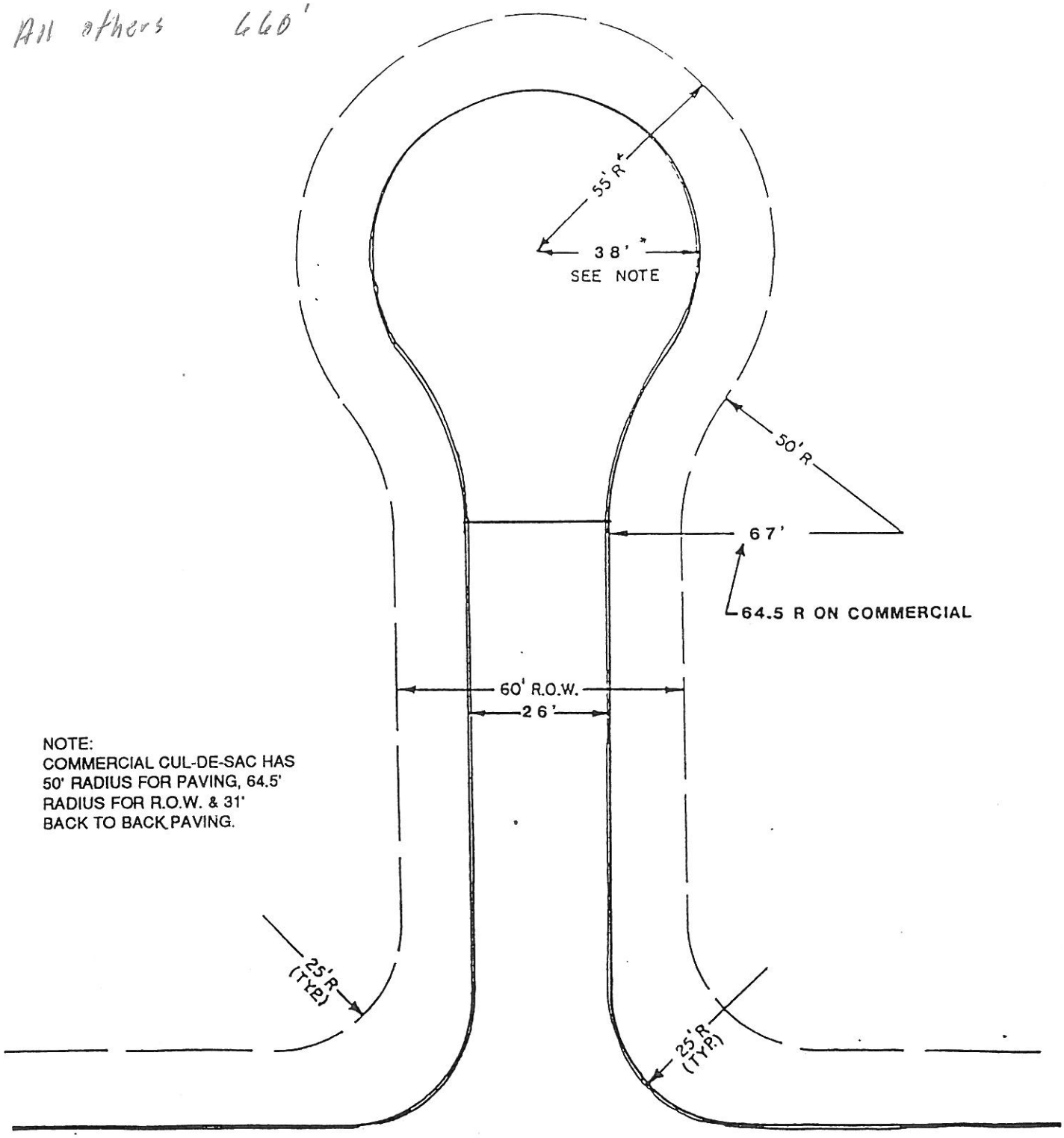

NOTE:
COMMERCIAL CUL-DE-SAC HAS 50' RADIUS FOR PAVING, 64.5' RADIUS FOR R.O.W. & 31' BACK TO BACK PAVING.

CITY OF WEST DES MOINES
"CROSSROADS OF THE INTERSTATES"

CUL-DE-SAC R.O.W. AND PAVING
26' STREET

REVISED : 3-94

DWG. NO.

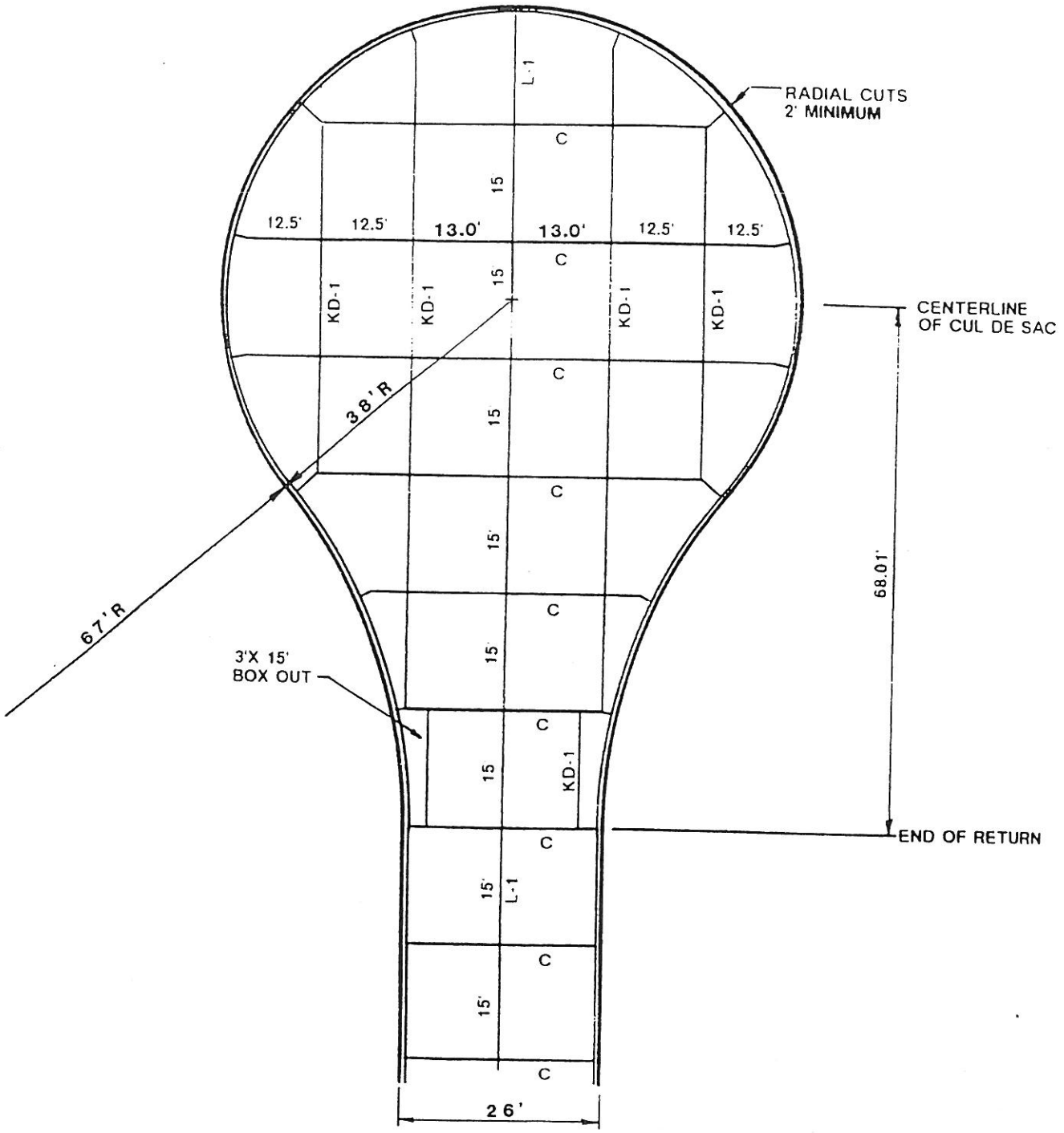

CITY OF WEST DES MOINES

"CROSSROADS OF THE INTERSTATES"

PORTLAND CEMENT CONCRETE PAVEMENT
RESIDENTIAL
CUL-DE-SAC JOINT DETAIL
26' STREET

REVISED 3-94

DWG. NO.: 7.12

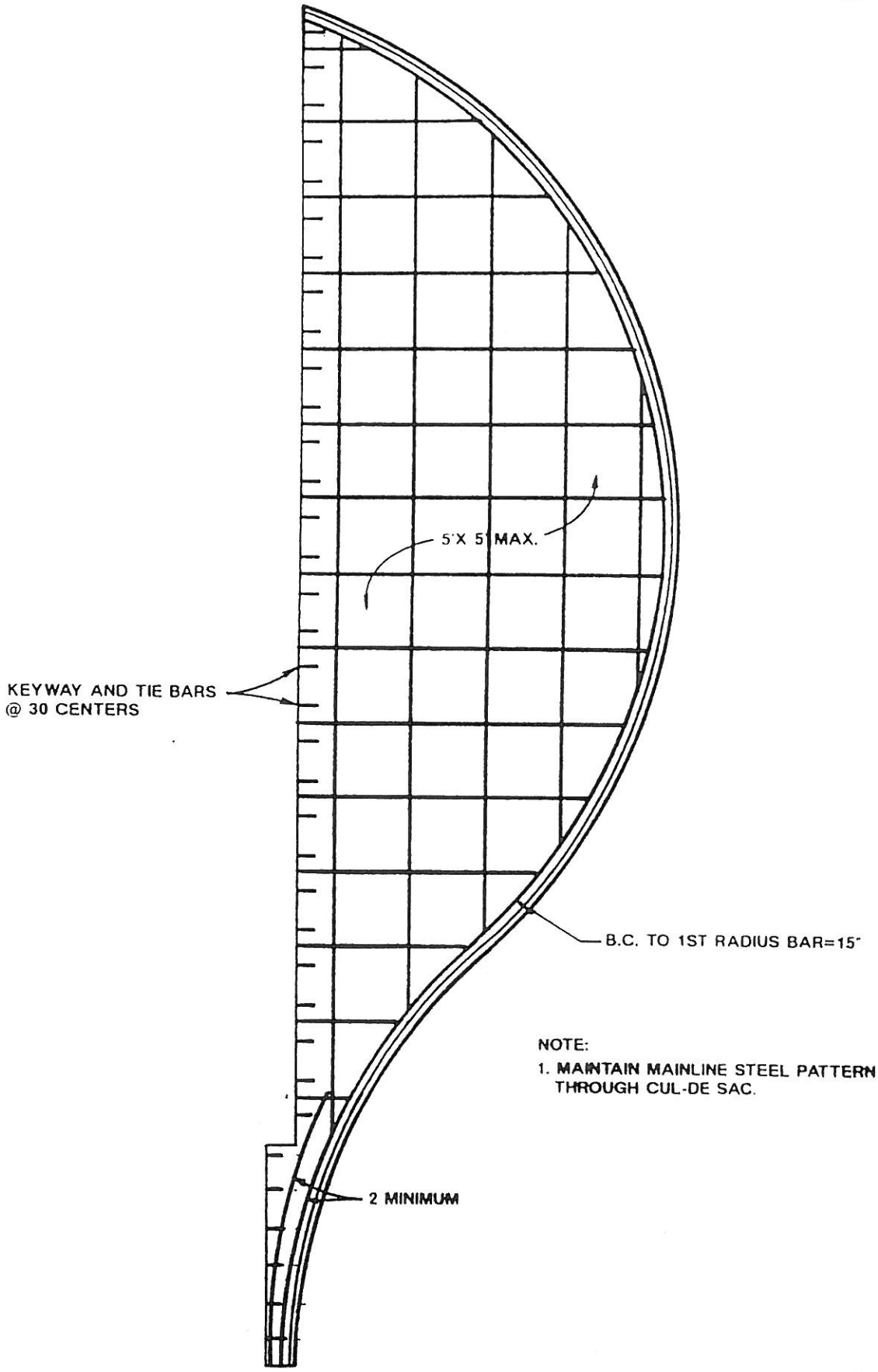

NOTE:

1. MAINTAIN MAINLINE STEEL PATTERN THROUGH CUL-DE SAC.

CITY OF WEST DES MOINES

"CROSSROADS OF THE INTERSTATES"

PORTLAND CEMENT CONCRETE PAVEMENT
RESIDENTIAL
CUL-DE-SAC REINFORCING

REVISED: 3-94

DWG. NO. 7.13

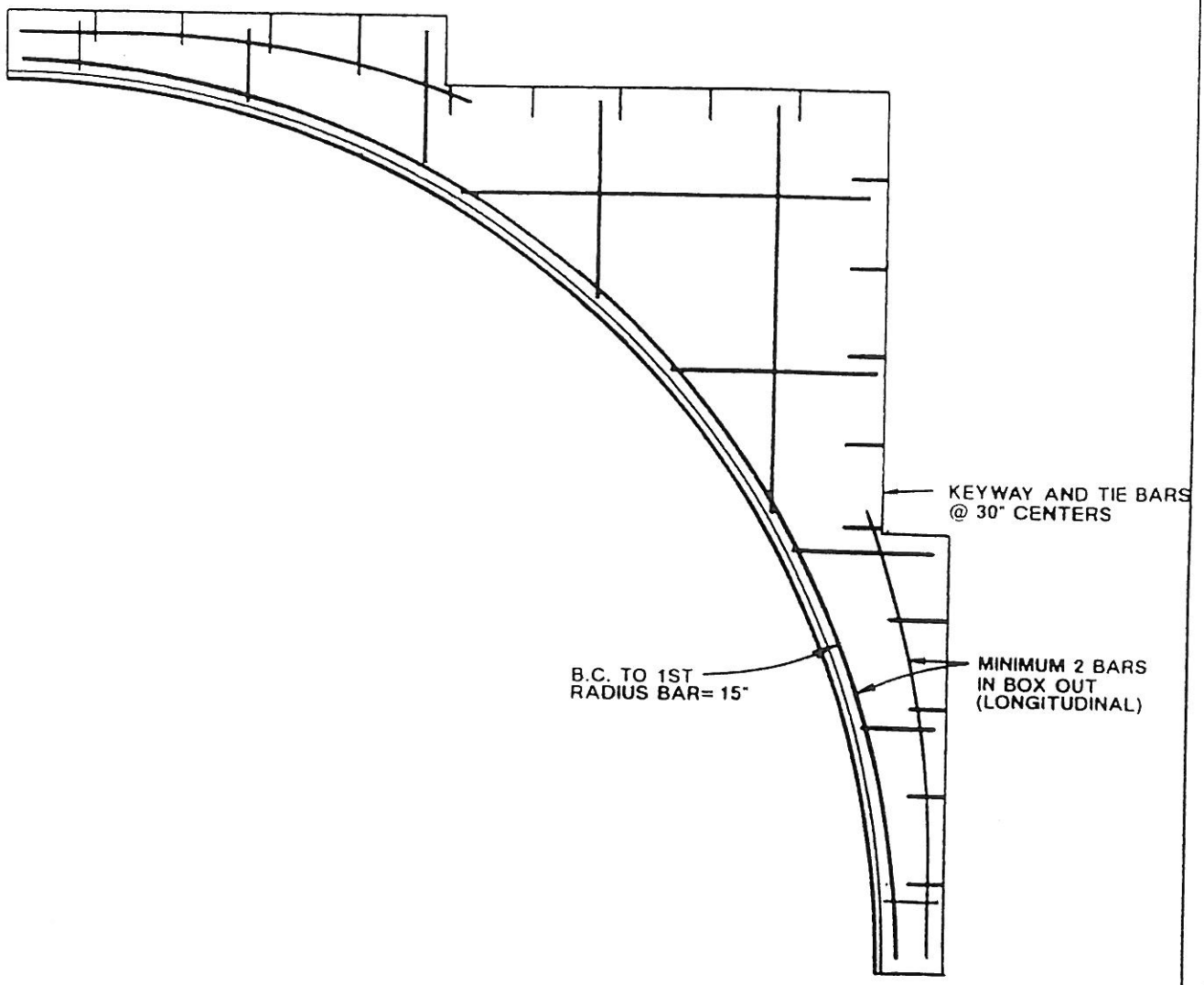

CITY OF WEST DES MOINES
"CROSSROADS OF THE INTERSTATES"

PORTLAND CEMENT CONCRETE PAVEMENT
RETURN REINFORCING

REVISED : 3-94

DWG. NO. 7.14

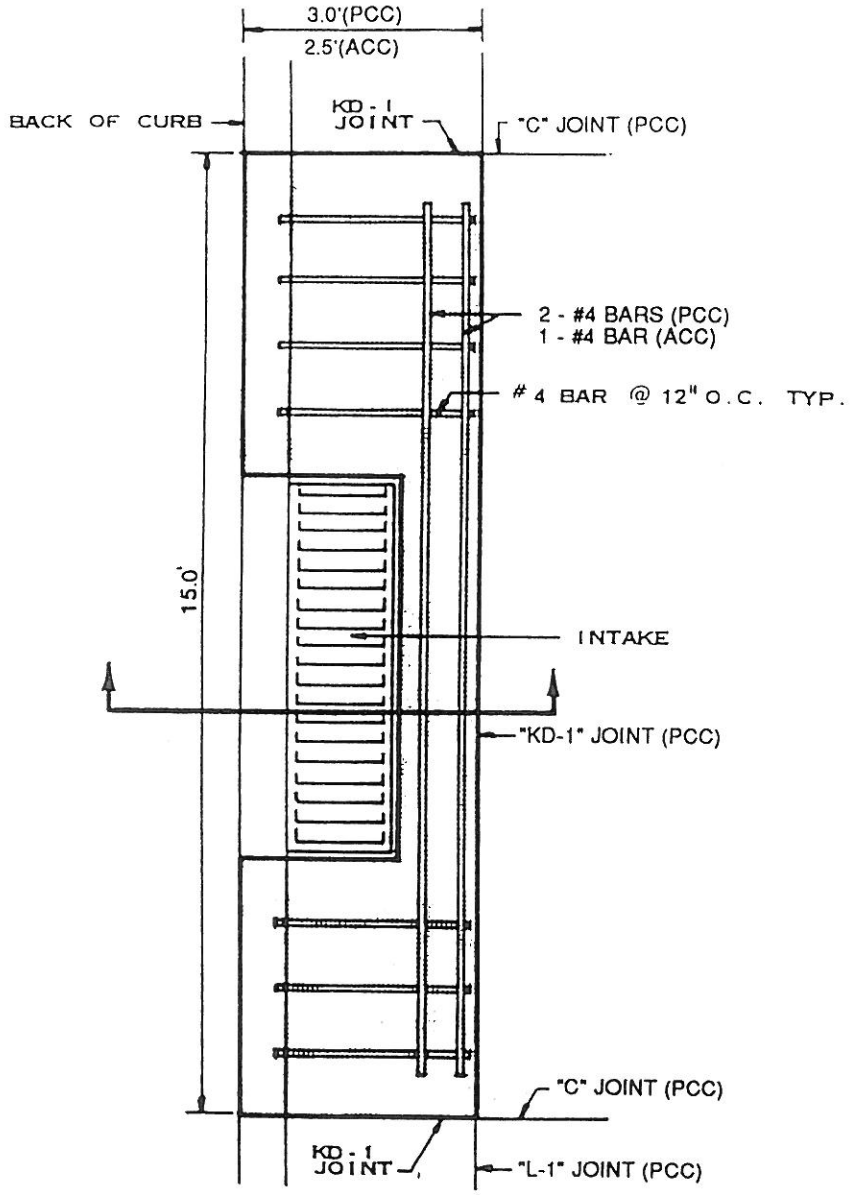

PLAN

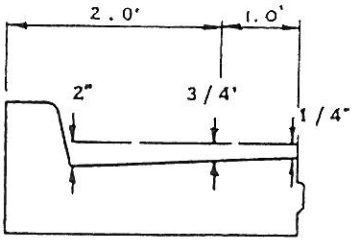

GRATE ADJUSTMENTS

PCC = PORTLAND CEMENT CONCRETE OPTION
ACC = ASPHALTIC CEMENT CONCRETE OPTION

CITY OF WEST DES MOINES
"CROSSROADS OF THE INTERSTATES"

INTAKE BOXOUT DETAIL

REVISED : 3-94

DWG. NO. 7 15

CASTING TYPE AS SPECIFIED IN PLANS OR SPECIFICATIONS

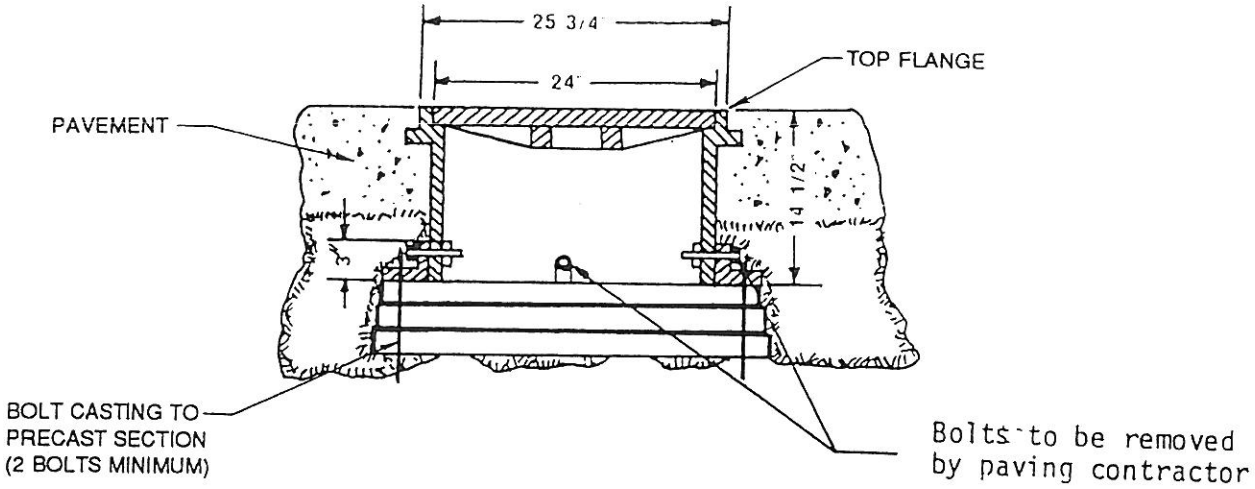

NOTES:
1. INSTALL TOP FLANGE FLUSH WITH GRADE.
2. DO NOT ALLOW TOP FLANGE AND PAVEMENT TO BE SUPPORTED BY MANHOLE WALL.
3. BOLT CASTINGS TO PRECAST SECTION, 2 BOLTS MINIMUM.
4. COMPACT COHESIVE SOIL AROUND MANHOLE FLANGE SECTION.
   DO NOT USE GRANULAR BACKFILL MATERIAL.

CITY OF WEST DES MOINES "CROSSROADS OF THE INTERSTATES"	TYPICAL MANHOLE ASSEMBLY IN PAVEMENT	REVISED 3-94 DWG. NO. 7.16

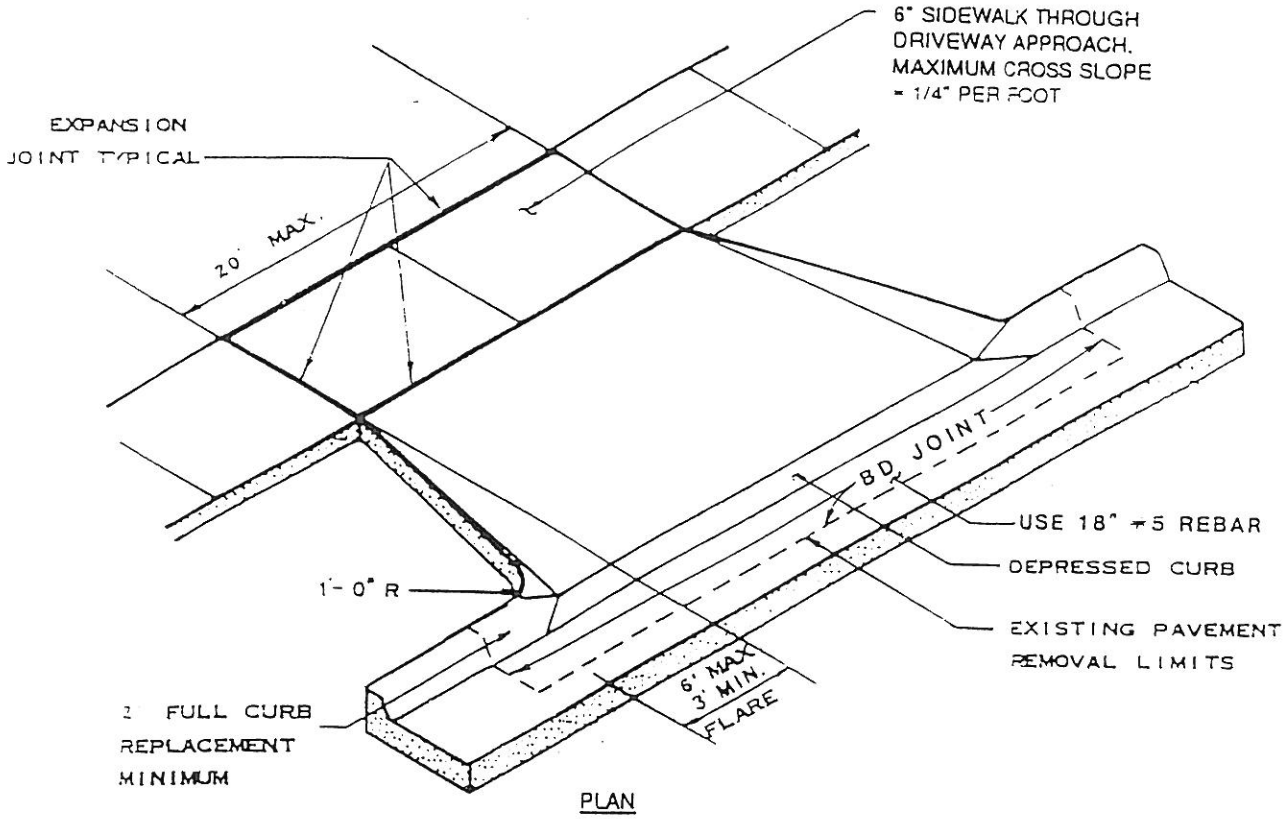

PLAN

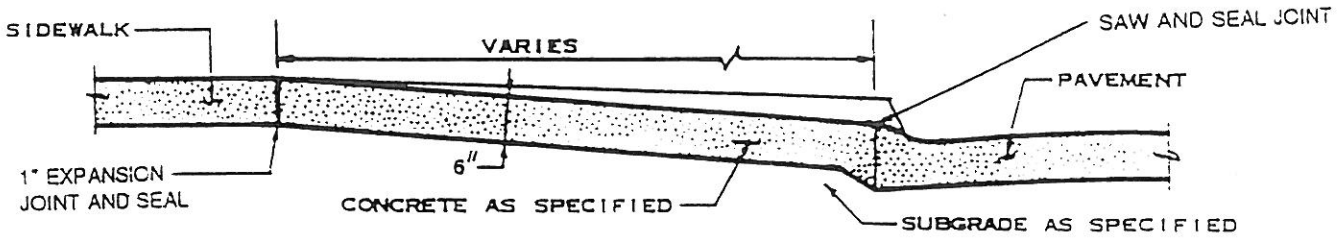

SECTION - (NEW PAVEMENT AND NEW DRIVEWAY)

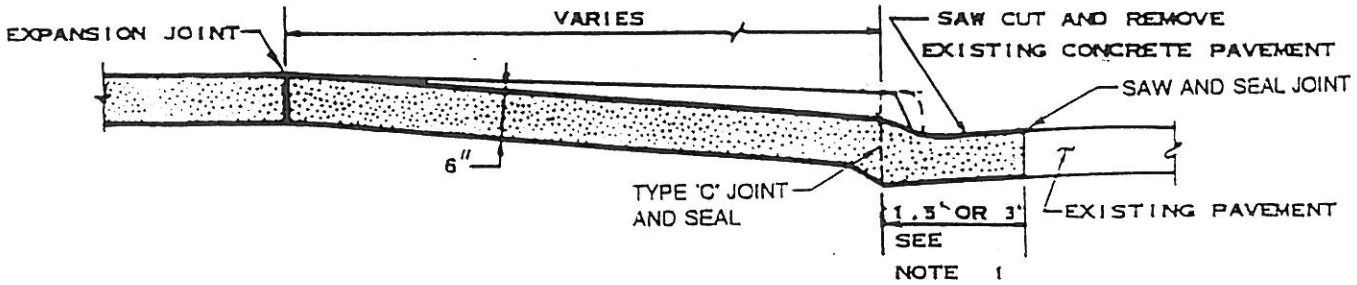

SECTION - (EXISTING PAVEMENT AND NEW DRIVEWAY)

NOTES:

1. SAW CUT AND REMOVE EXISTING CONCRETE A WIDTH OF 3' WHEN EXISTING JOINT IS 3' FROM BACK OF CURB
2. IN LIEU OF PAVEMENT REMOVAL THE CONCRETE CURBS MAY BE SAWED OR GROUND OFF TO CONFORM TO THE SPECIFIED SHAPE FOR DEPRESSED CURB DRIVEWAYS.
3. SAW CUT PAVEMENT JOINTS IN GENERAL CONFORMANCE WITH PORTLAND CEMENT CONCRETE INTERSECTION DETAILS.

CITY OF WEST DES MOINES
"CROSSROADS OF THE INTERSTATES"

RESIDENTIAL DRIVEWAY DETAILS

REVISED : 3-94

DWG. NO. 7.17

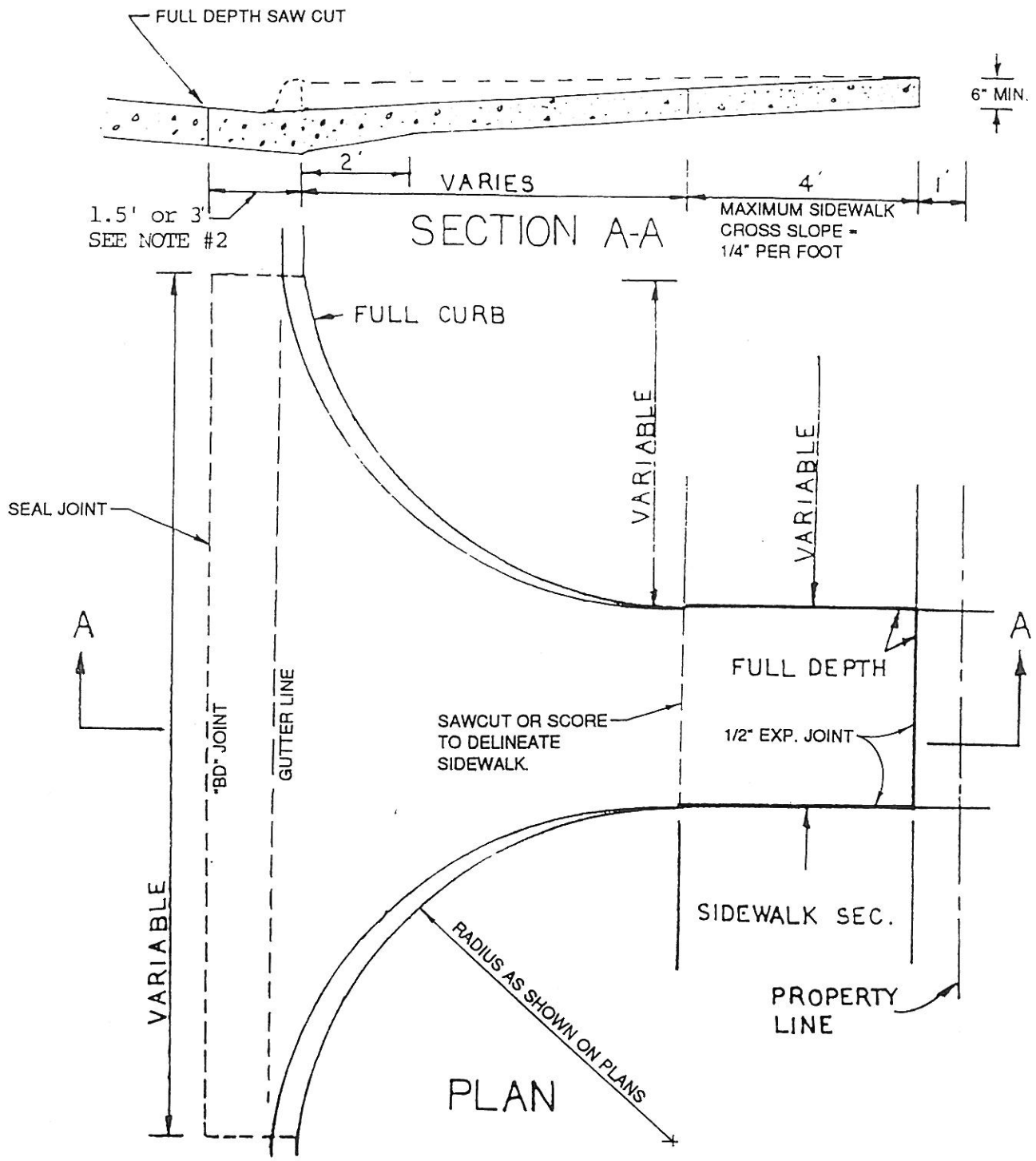

NOTES:

1. BEFORE THE CONCRETE IS PLACED, THE SAW CUT JOINTS SHALL BE COMPLETELY CLEANED OF ALL LOOSE CONCRETE OR FOREIGN MATERIAL.
2. SAW CUT AND REMOVE EXISTING CONCRETE PAVEMENT A WIDTH OF 3' WHEN EXISTING JOINT IS 3' FROM BACK OF CURB.
3. SAW CUT PAVEMENT JOINTS IN GENERAL CONFORMANCE WITH PORTLAND CEMENT CONCRETE INTERSECTION DETAILS.

CITY OF WEST DES MOINES "CROSSROADS OF THE INTERSTATES"	COMMERCIAL DRIVEWAY DETAIL	REVISED : 3-94 DWG. NO. 7.18

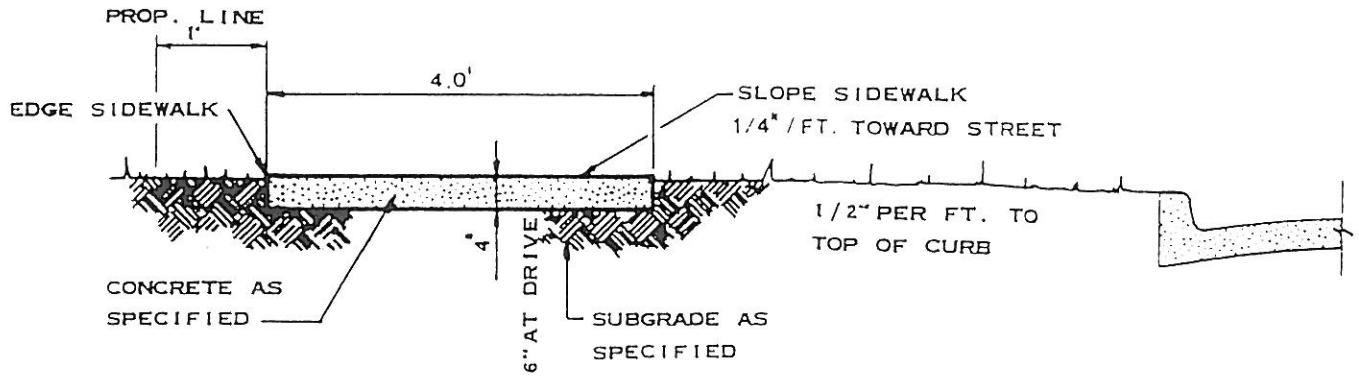

SECTION

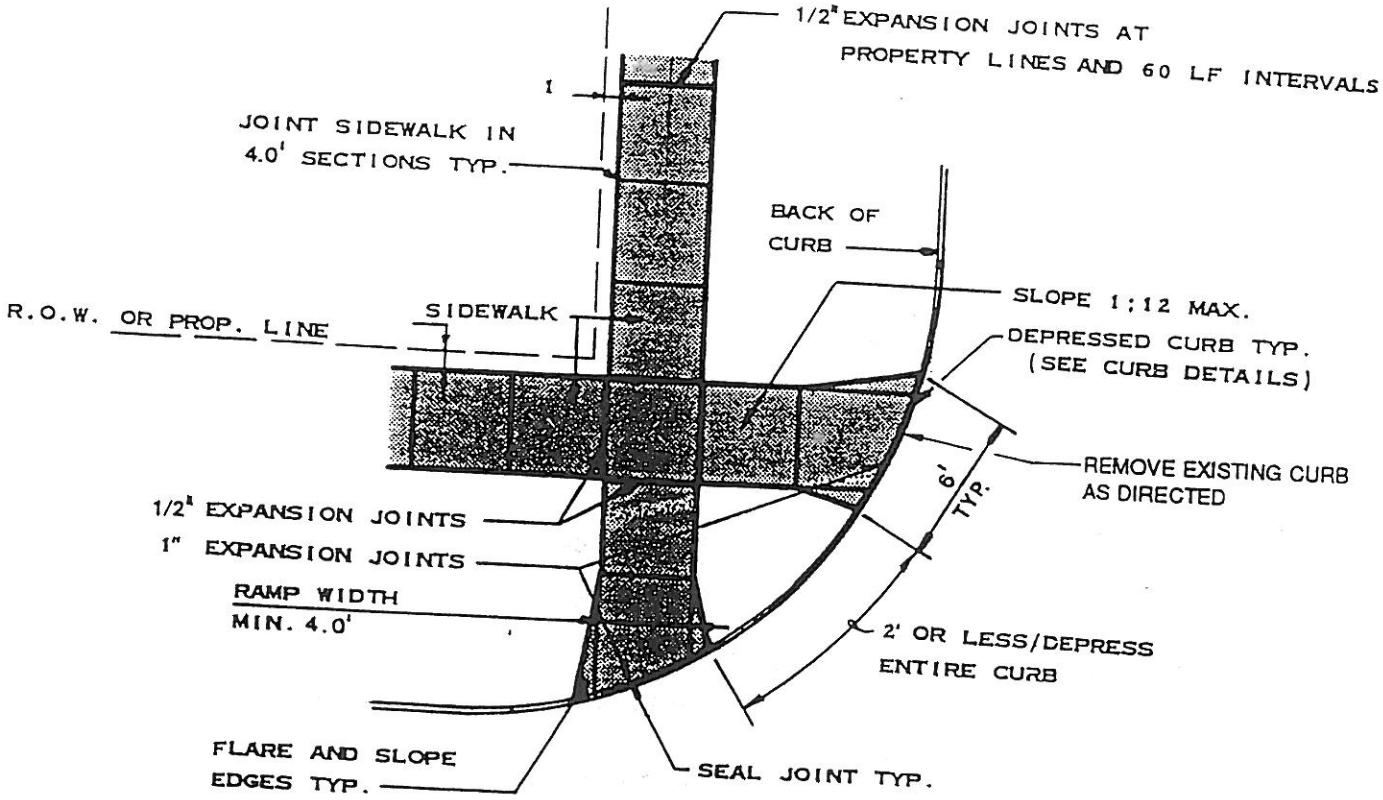

PLAN

NOTES:

1. CONSTRUCT PEDESTRIAN RAMPS 6" THICK BETWEEN EXPANSION JOINTS.
2. VARIATION IN THE CROSS SLOPE OF THE PARKING AREA MUST BE APPROVED BY THE CITY.
3. IN LIEU OF PAVEMENT REMOVAL THE CONCRETE CURBS MAY BE SAWED OR GROUND OFF TO CONFORM TO THE SPECIFIED SHAPE FOR DEPRESSED CURB DRIVEWAYS.

CITY OF WEST DES MOINES "CROSSROADS OF THE INTERSTATES"	SIDEWALK DETAILS	REVISED : 3-94
		DWG. NO. 7.19

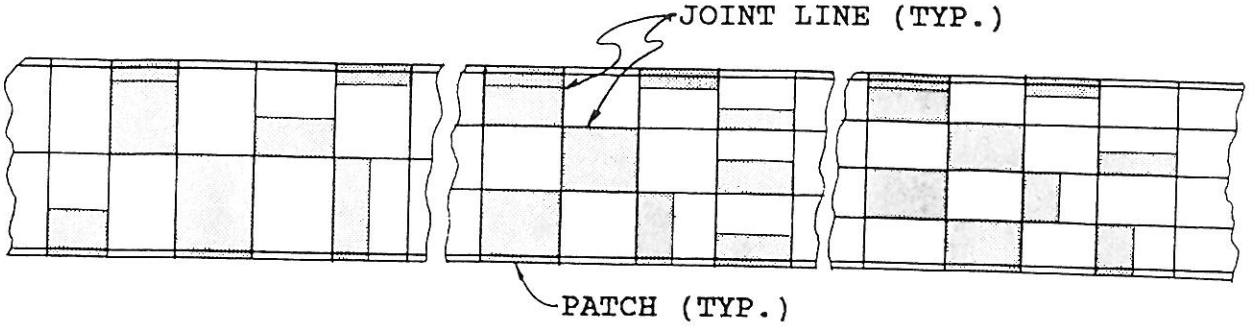

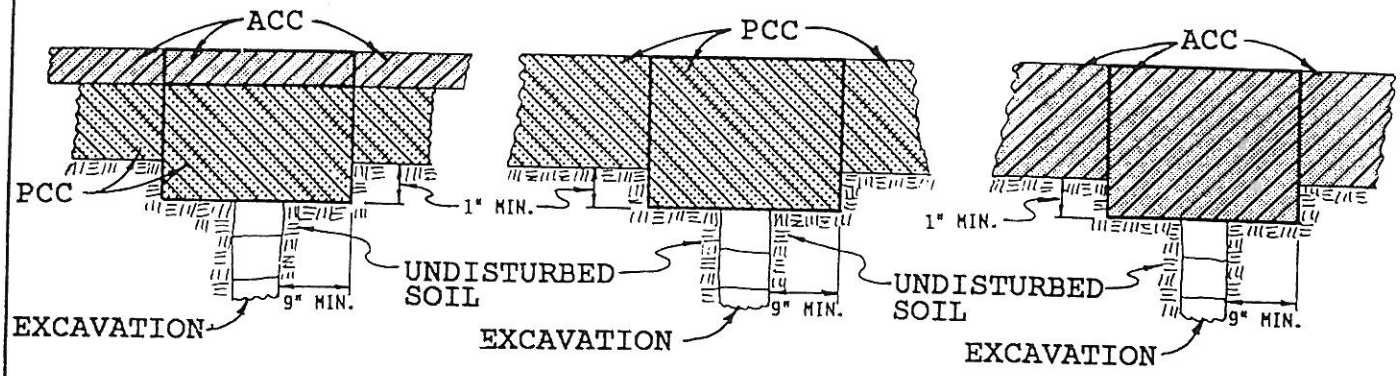

ACC RESURFACED PCC PAVEMENT

PCC PAVEMENT

ACC PAVEMENT

NOTES:

1. SAWCUT ALL PATCHES FULL DEPTH PRIOR TO REMOVAL.
2. PLACE BACKFILL IN MAXIMUM 8" LIFTS.
   I.D.O.T. CLASS "A" CRUSHED STONE MAY BE USED AS ALTERNATE BACKFILL MATERIAL - COMPACT BACKFILL TO 95% MAXIMUM DENSITY.
3. CONSTRUCT TYPE "BD" LONGITUDINAL JOINTS AND TYPE "BD-2" TRANSVERSE JOINTS ON ALL PCC PATCHES.
4. USE I.D.O.T. M-4 PCC CONCRETE MIX AND I.D.O.T. TYPE "A" ACC CONCRETE MIX AS SHOWN.
5. SAW AND SEAL ALL PCC PATCHES.
6. HALF PANEL PCC PATCHES MAY BE ALLOWED UNDER THE FOLLOWING CONDITIONS:
   A. PAVEMENT IS MORE THAN TEN (10) YEARS OLD.
   B. THE LENGTH OF THE PATCH AN / OR THE REMAINING PANEL DO NOT EXCEED TWICE THE WIDTH.
   C. PRIOR APPROVAL IS RECEIVED FROM THE CITY.
7. SMALLER PATCHES MAY BE ALLOWED ON STREETS MORE THAN TWENTY (20) YEARS OLD WITH APPROVAL FROM CITY ENGINEER.
8. UNDERMINING OF PAVEMENT IS NOT PERMITTED.
9. PCC PATCHES TO BE REINFORCED IN A SIMILAR FASHION AS SHOWN ON PAVEMENT DETAIL DRAWINGS.
10. THE CONTRACTOR MUST RECEIVE PERMISSION TO CONSTRUCT PATCHES WHICH MUST BE TEMPORARILY INSTALLED DUE TO WEATHER OR TRAFFIC CONSTRAINTS. PERMANENT REPAIRS MUST BE MADE AS SOON AS WEATHER OR TRAFFIC PERMITS.

CITY OF WEST DES MOINES "CROSSROADS OF THE INTERSTATES"	STREET EXCAVATION AND PAVEMENT REPLACEMENT DETAILS	REVISED 3-94 DWG. NO. 7.20

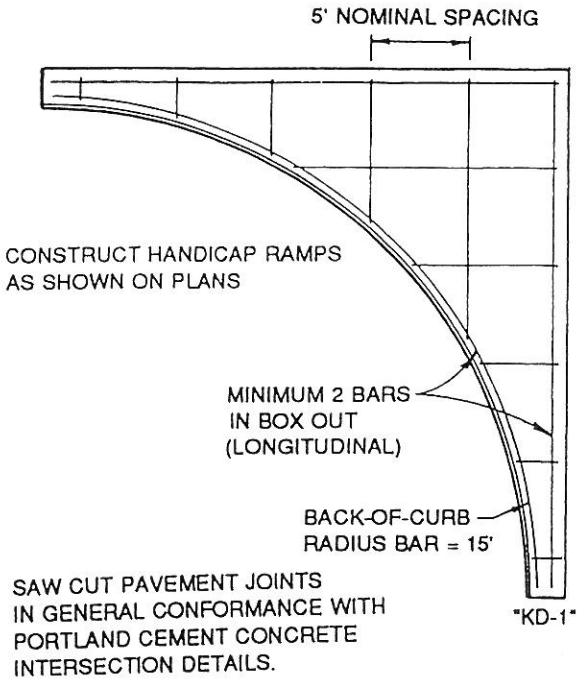

RADIUS DETAIL

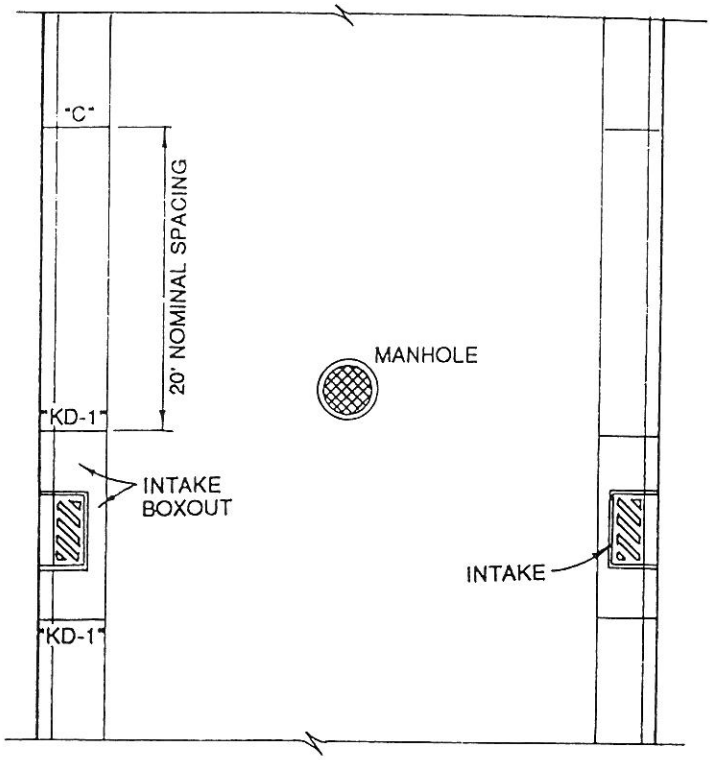

PLAN

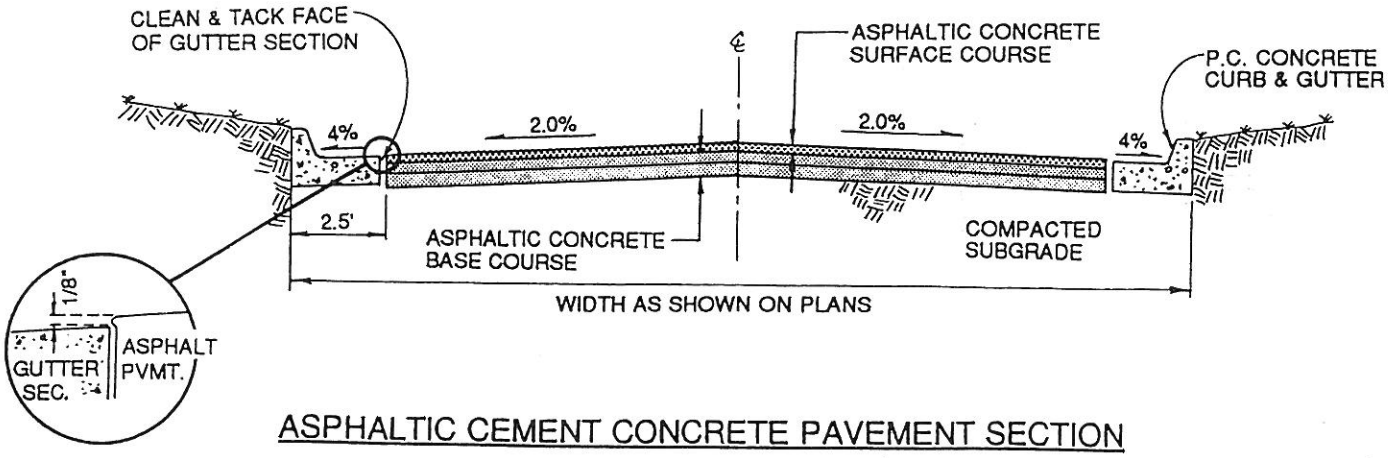

ASPHALTIC CEMENT CONCRETE PAVEMENT SECTION

NOTE:
1. INSTALL TYPE "E" EXPANSION JOINTS AT NOT LESS THAN 100' INTERVALS.

CITY OF WEST DES MOINES "CROSSROADS OF THE INTERSTATES"	**ASPHALTIC CEMENT CONCRETE PAVEMENT**	REVISED 3-94 DWG. NO 81

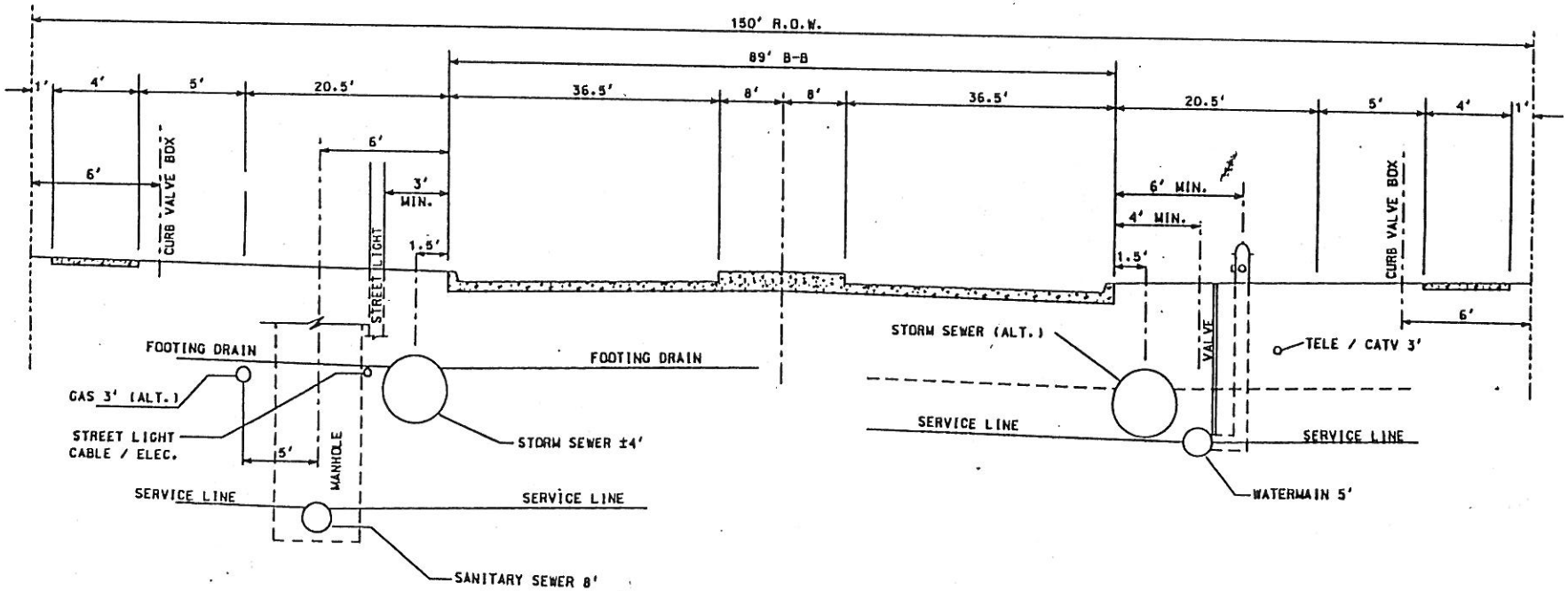

FIGURE 8.1

CITY OF WEST DES MOINES
DEPARTMENT OF PUBLIC WORKS
ENGINEERING DIVISION
CADD PRODUCED

DATE: 06-16-92

PROJECT:

STANDARD 89' MAJOR ARTERIAL STREET

DRAWN BY:

DESIGNED BY:

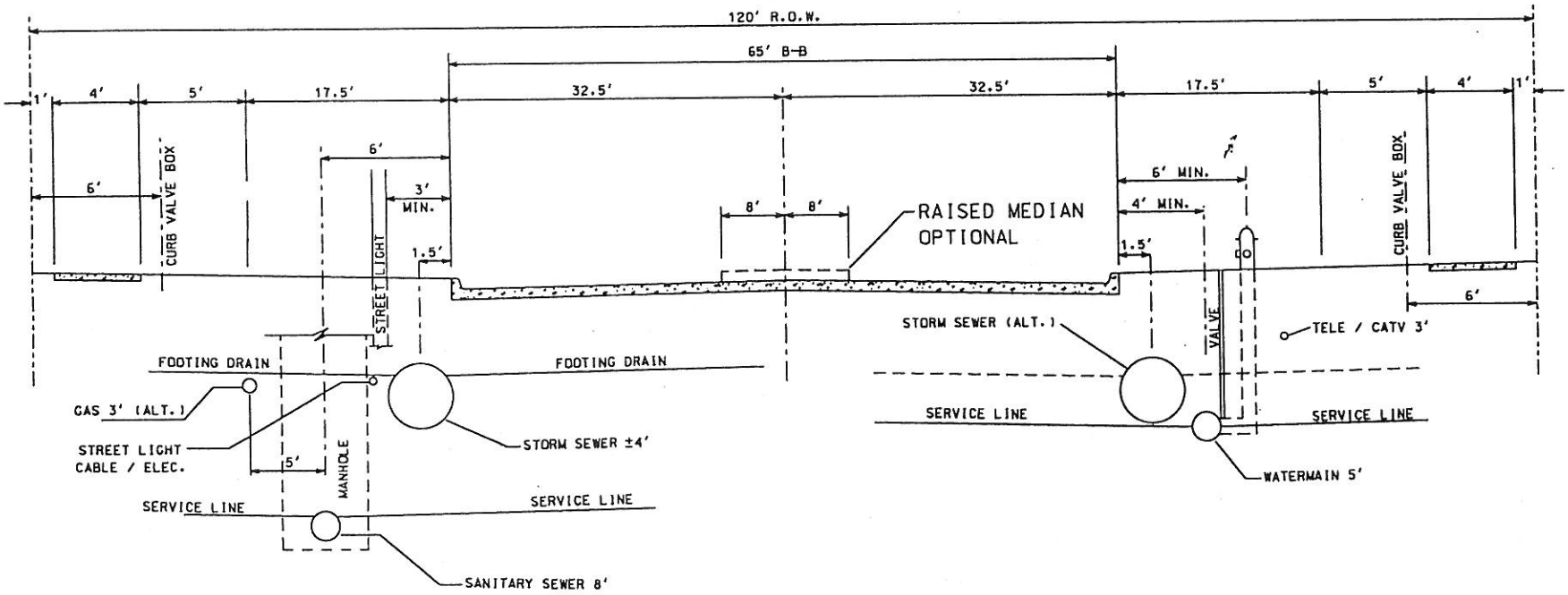

FIGURE 8.2

CITY OF WEST DES MOINES
DEPARTMENT OF PUBLIC WORKS
ENGINEERING DIVISION
560 S. 15TH STREET (515)223-3261
WEST DES MOINES, IOWA 50265
FAX NO. (515)223-3267
CADD PRODUCED

DATE: 06-16-92
REVISED:

PROJECT:
STANDARD 65' MAJOR ARTERIAL STREET

DRAWN BY: JDH
DESIGNED BY:
SCALE: N/A

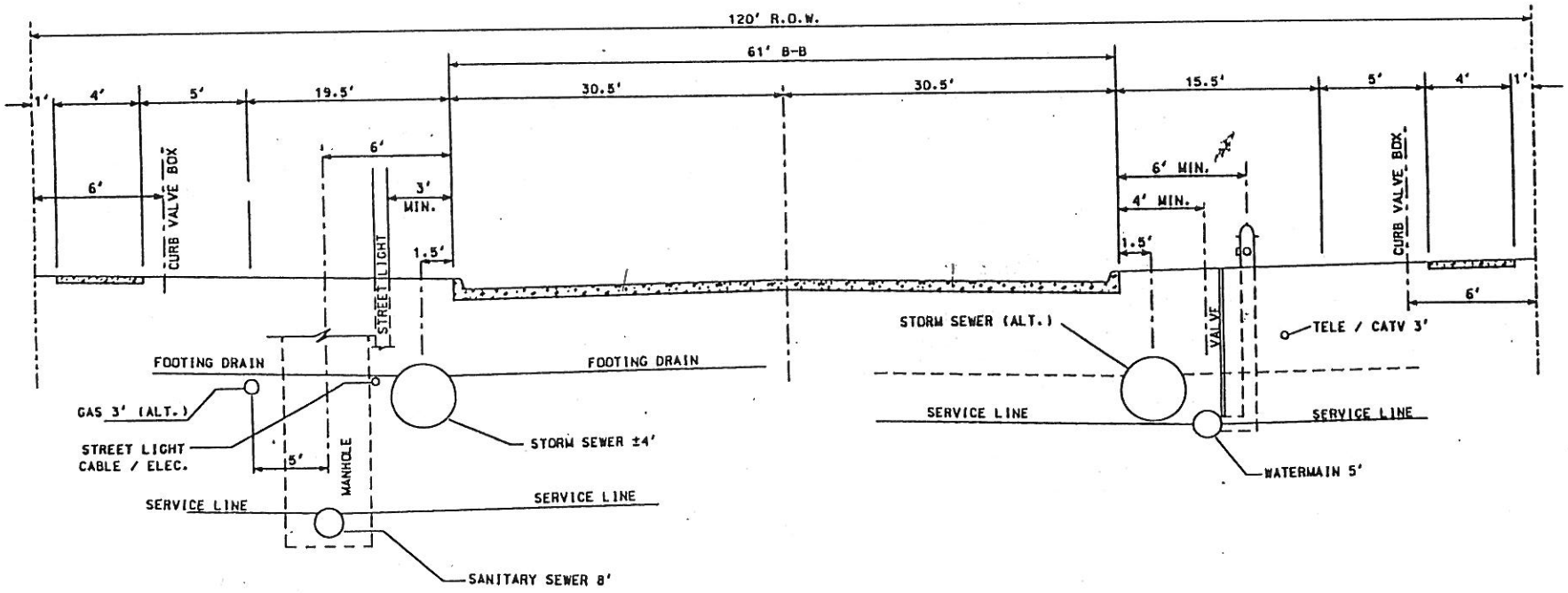

FIGURE 8.3

CITY OF WEST DES MOINES
DEPARTMENT OF PUBLIC WORKS
ENGINEERING DIVISION
CADD PRODUCED

DATE: 06-16-92

PROJECT:

STANDARD 61' MINOR ARTERIAL STREET

DRAWN BY: JDH

DESIGNED BY:

N/A

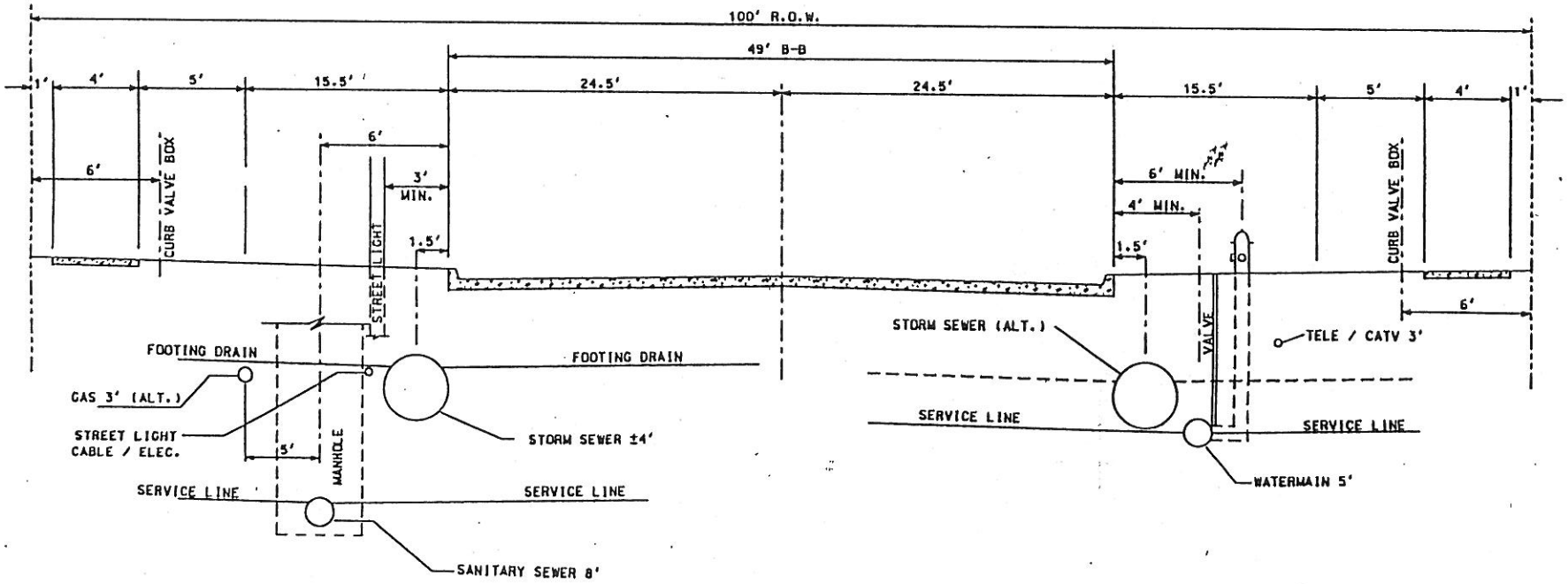

FIGURE 8.4

CITY OF WEST DES MOINES
DEPARTMENT OF PUBLIC WORKS
ENGINEERING DIVISION
660 S. 16TH STREET (515)223-3261
WEST DES MOINES, IOWA 50265
FAX NO. (515)223-3267
CADD PRODUCED

DATE: 06-16-92
REVISED:

PROJECT:

STANDARD 49' MAJOR COLLECTOR STREET

DRAWN BY: JDH
DESIGNED BY:
SCALE: N/A

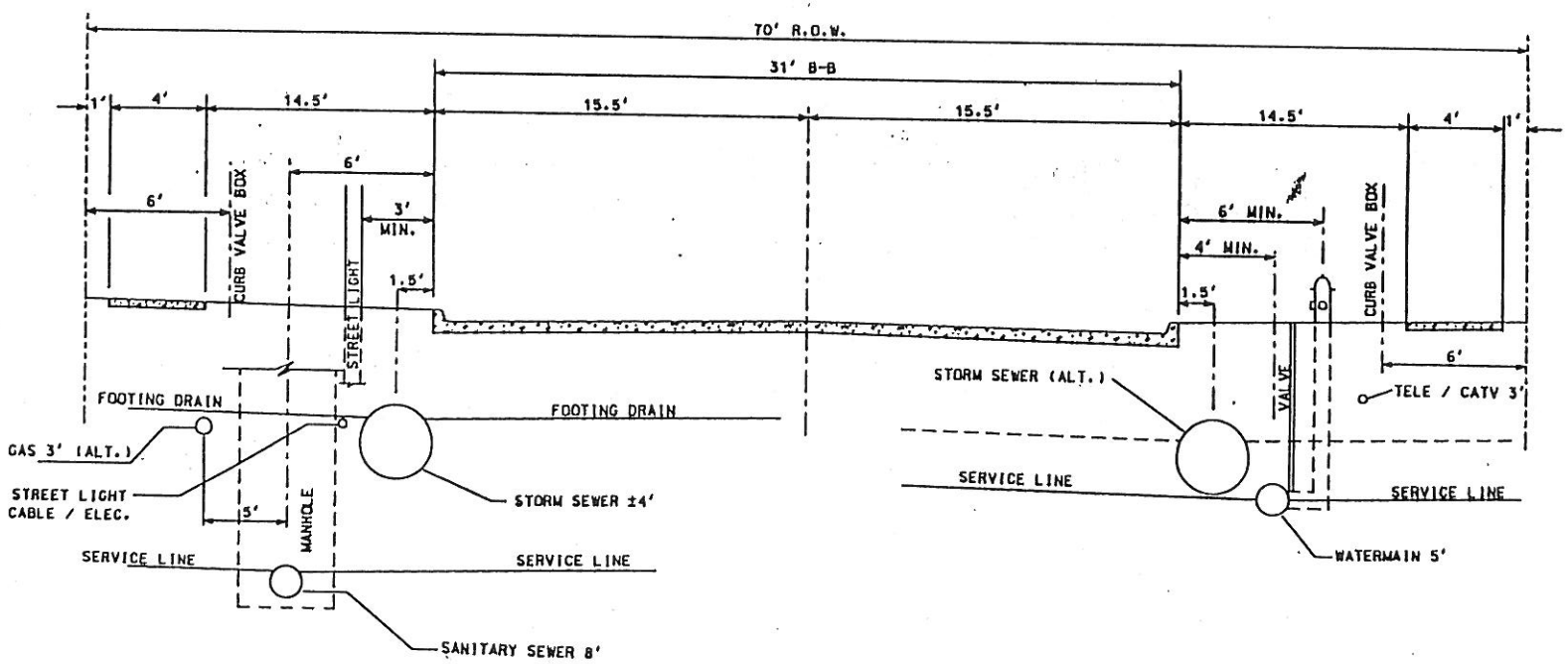

FIGURE 8.5

CITY OF WEST DES MOINES
DEPARTMENT OF PUBLIC WORKS
ENGINEERING DIVISION
540 S. 16TH STREET (515)223-3281
WEST DES MOINES, IOWA 50265
FAX NO. (515)223-3287
CADD PRODUCED

DATE: 06-16-92
REVISED:

PROJECT:
STANDARD 31' MINOR COLLECTOR STREET

DRAWN BY: JDH
DESIGNED BY:

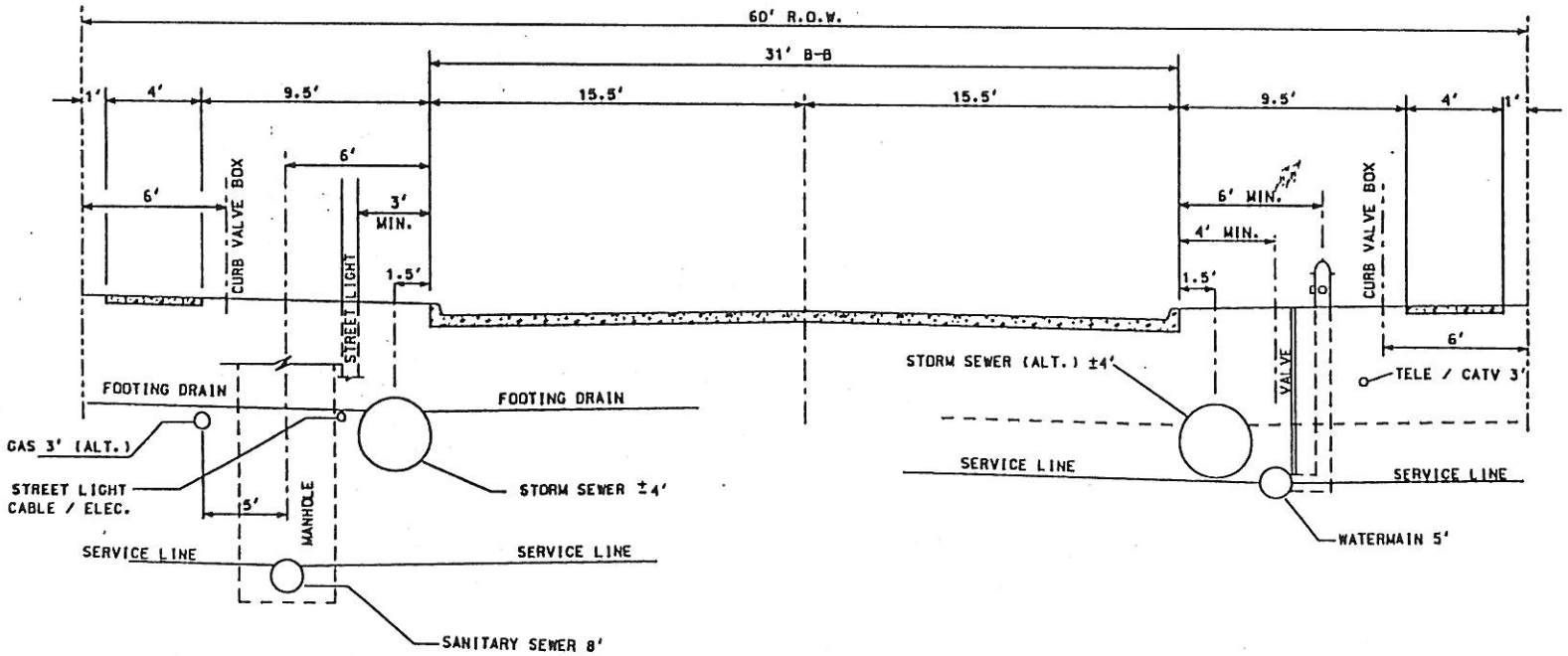

FIGURE 8.6

Minor Collector - ~~35~~ 30
Major Collector - 35
Minor Arterial - 45
Major Arterial - 45

Design speeds

g1 + g2 = A
A X K value = Length ±

CITY OF WEST DES MOINES
DEPARTMENT OF PUBLIC WORKS
ENGINEERING DIVISION
CADD PRODUCED

DATE: 06-16-92
REVISED:

PROJECT:
STANDARD 31' LOCAL STREET

DRAWN BY: JDH
DESIGNED BY:
SCALE: N/A

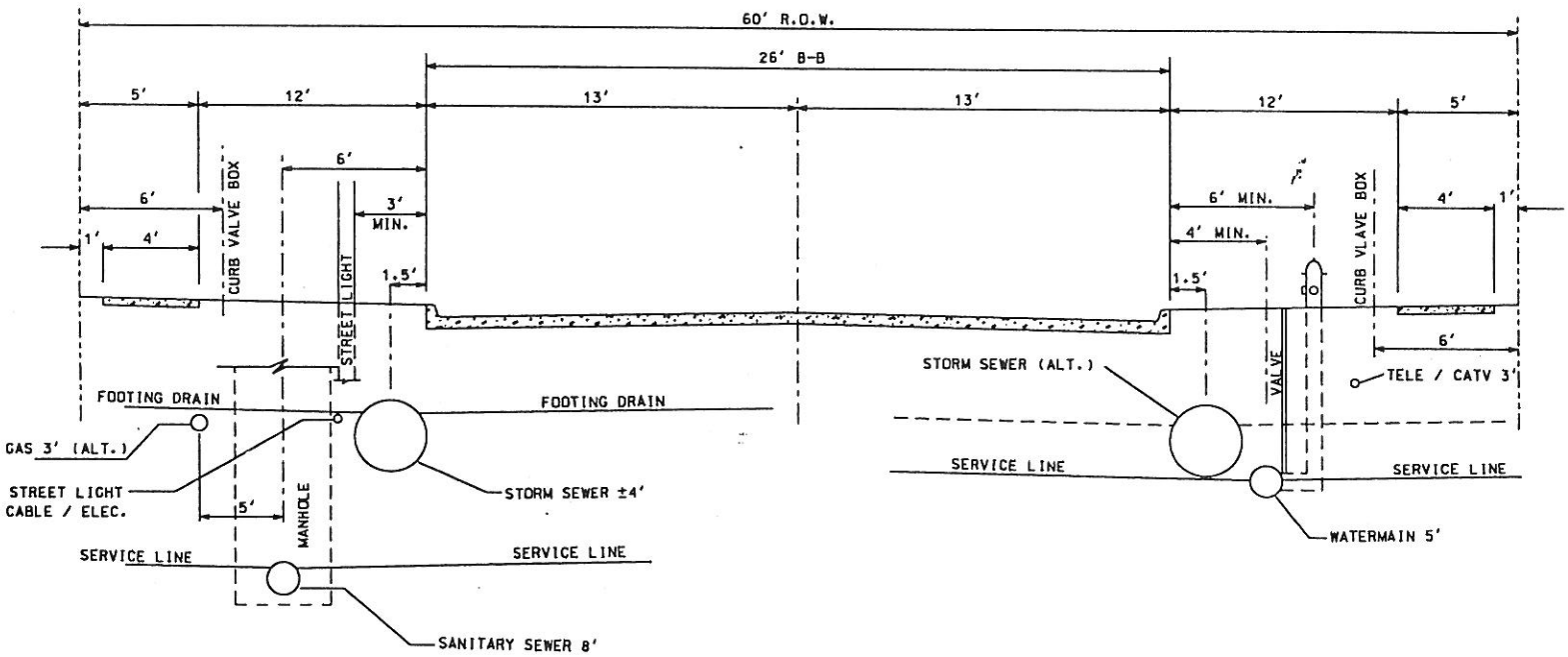

FIGURE 8.7

CITY OF WEST DES MOINES
DEPARTMENT OF PUBLIC WORKS
ENGINEERING DIVISION
560 S. 16TH STREET (515)223-3261
WEST DES MOINES, IOWA 50265
FAX NO. (515)223-3267
CADD PRODUCED

DATE: 06-16-92
REVISED:

PROJECT:

STANDARD 26' CUL-DE-SAC AND MINOR LOCAL STREET

DRAWN BY: JDH
DESIGNED BY:
N/A

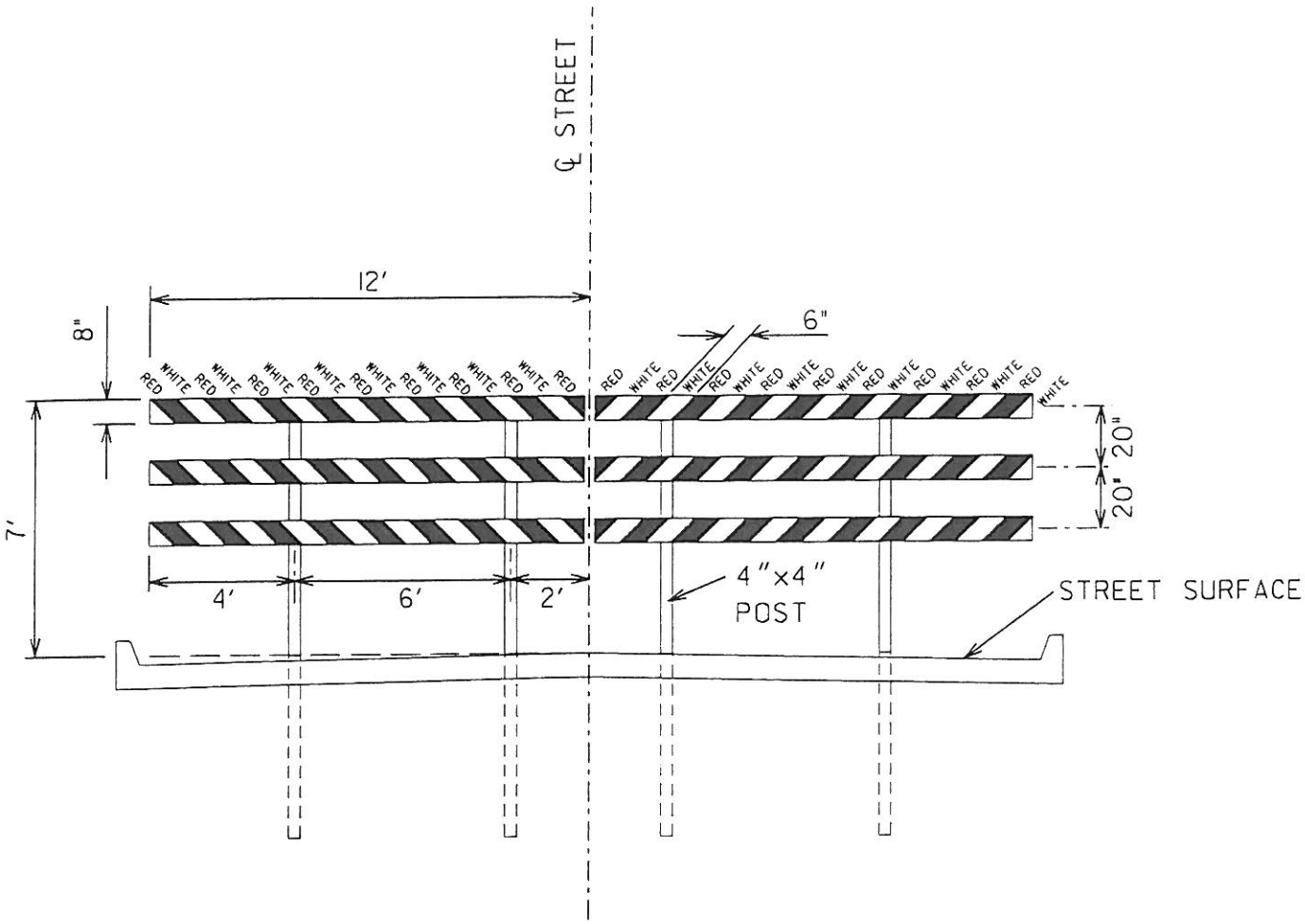

Type III Barricades shall be constructed as follows to cover the entire road surface.

Per Barricade:

1. Two (2) 4" x 4" x 12' pressure treated - 7 feet from road surface to top of 4 x 4 per barricade level with each other.
2. Three (3) 2" x 8" x 12' pressure treated - top board shall be level with top of the 2 4 x 4's. then 20" from center of the top board to center of the second board and 20" from the center of the 2nd board to the center of the third board.
3. The stripes shall be red and white alternating and shall slope towards the center of the road at a 45° angle and be 6" wide reflective engineering grade material.
4. There shall be no space between barricades at the middle of the road surface.

CITY OF WEST DES MOINES
DEPARTMENT OF PUBLIC WORKS
ENGINEERING DIVISION
560 S. 16TH STREET (515)222-3475
WEST DES MOINES, IOWA 50265
FAX NO. (515)222-3478
CADD PRODUCED

TYPE III BARRICADE

REVISED: 11-96

DRAWING NUMBER:

FIGURE "A"

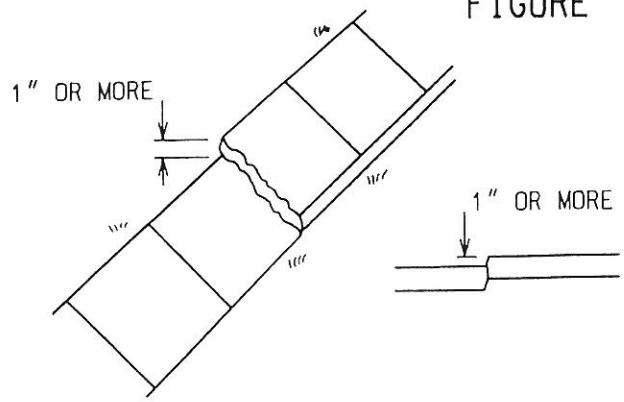

"A" Sidewalk faulted at joint or crack with 1" or more deflection.

FIGURE "B"

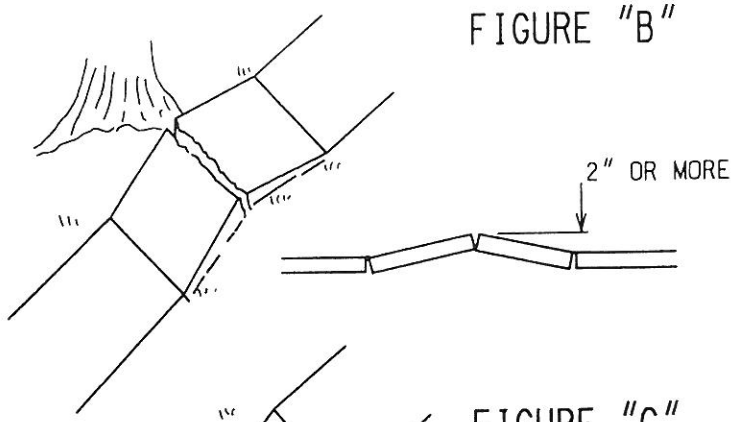

"B" Sidewalk raised more than 2" in 8 ft. from normal profile line of sidewalk.

FIGURE "C"

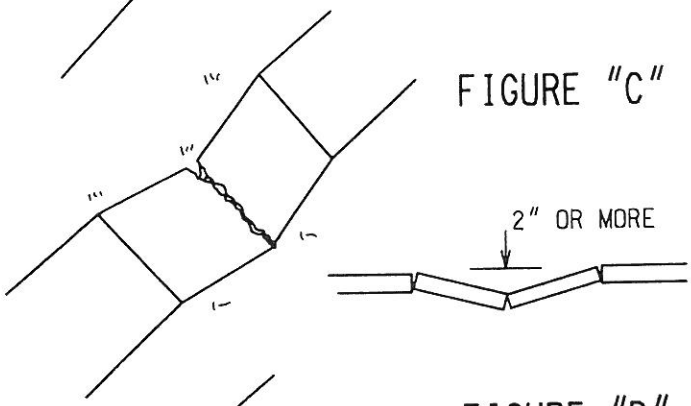

"C" Sidewalk sunken more than 2" in 8 ft. from normal profile line of sidewalk.

FIGURE "D"

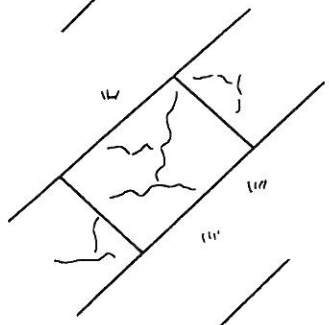

"D" Sidewalk cracked into 3 or more pieces per panel, or any single crack with 1/2" or greater openings.

FIGURE "E"

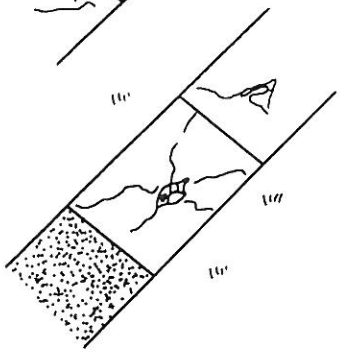

"E" Sidewalk cracked and / or spalled (small crater like holes deeper than 3/8") with part of sidewalk missing, forming holes deeper than 3/8".

CITY OF WEST DES MOINES
DEPARTMENT OF PUBLIC WORKS
ENGINEERING DIVISION
5600 S. 16TH STREET (515)222-3475
WEST DES MOINES, IOWA 50265
FAX NO. (515)222-3478
CADD PRODUCED

SIDEWALK DEFECTS

REVISED: 7-10-96

DRAWING NUMBER:

H:/CADD/SPECDGNS/SIDEWALK.DGN

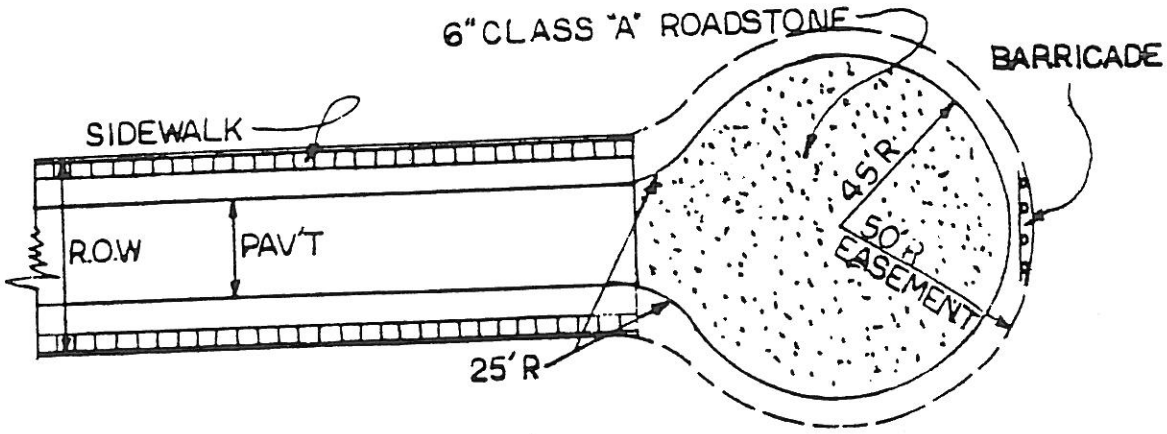

OPTION 1

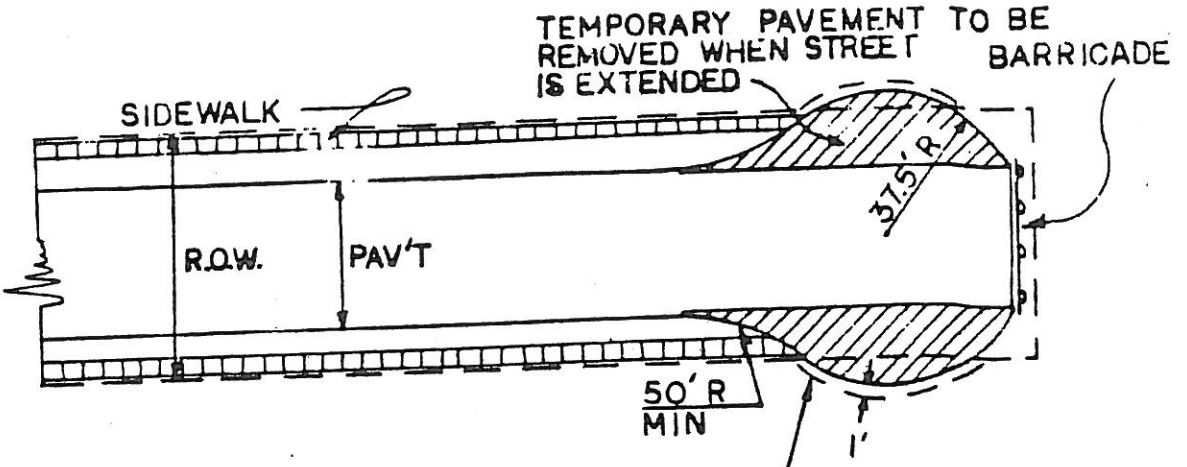

OPTION 2

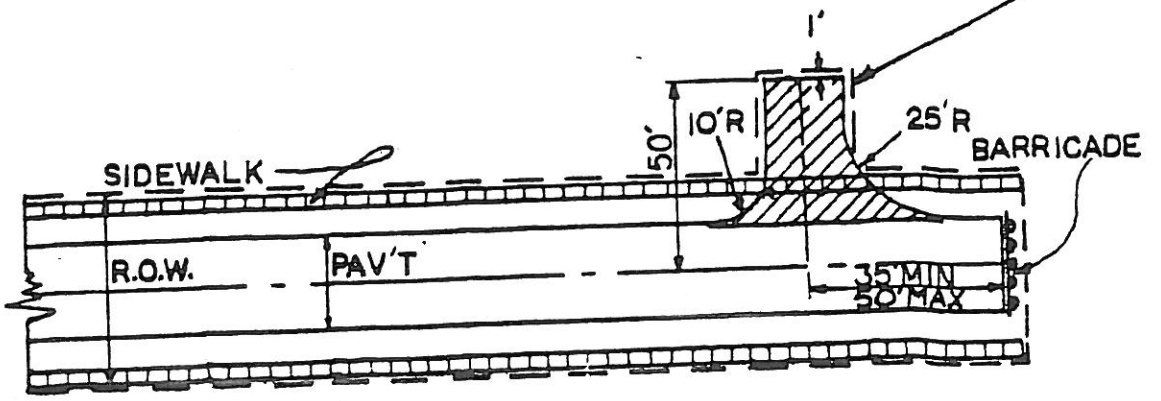

OPTION 3

INTERIM TURN-A-ROUNDS

SKETCH NO. 4

COPYRIGHT R. E. HAYS AND ASSOCIATES 1979